IOP Solar Editorial

Richard Hanson-Graville, DPS Tel 01372 803643, Fax 01372 803678, Email R@heatweb.com
15th August 2000

Solar systems are not new, and have been used the world over for decades. They have, however, even with over 40,000 systems installed, never really made it into mainstream use in the UK. We receive sufficient sunshine to provide up to 70% of our annual domestic hot water needs from a well designed solar installation and such a system will also reduce harmful emissions by up to 500 kg per square metre of panel per year. Solar hot water and heating systems are becoming cheaper and more efficient, helped by government initiatives such as the reduction in VAT to 5% on both parts and labour for domestic installations that can demonstrate an improvement to energy efficiency. Now is the time for UK plumbers to get to grips with solar technology, and start presenting it as a serious option to customers.

There are four main parts to a typical pumped solar system: solar panels, a water store, connecting pipework, and controls, typically comprising of a pump and a controller. The panels fitted to the roof collect heat from the sun, using it to heat water. This water is then circulated to the store, which can be either a vented or unvented cylinder, or a thermal store, typically fitted with a dedicated coil to transfer heat into the store. The controller monitors the temperatures in the panel and in the store, via dedicated temperature sensors, and will activate the solar pump to circulate heat from the panel to the store when available (typically when the panel is around 5°C hotter than the store). The solar system can be thought of as a separate primary circuit, installed as either a sealed system (using an expansion vessel, filling loop and pressure relief valve, or as a vented system connected to a feed and expansion tank (higher than the panels). All pipework should be well insulated.

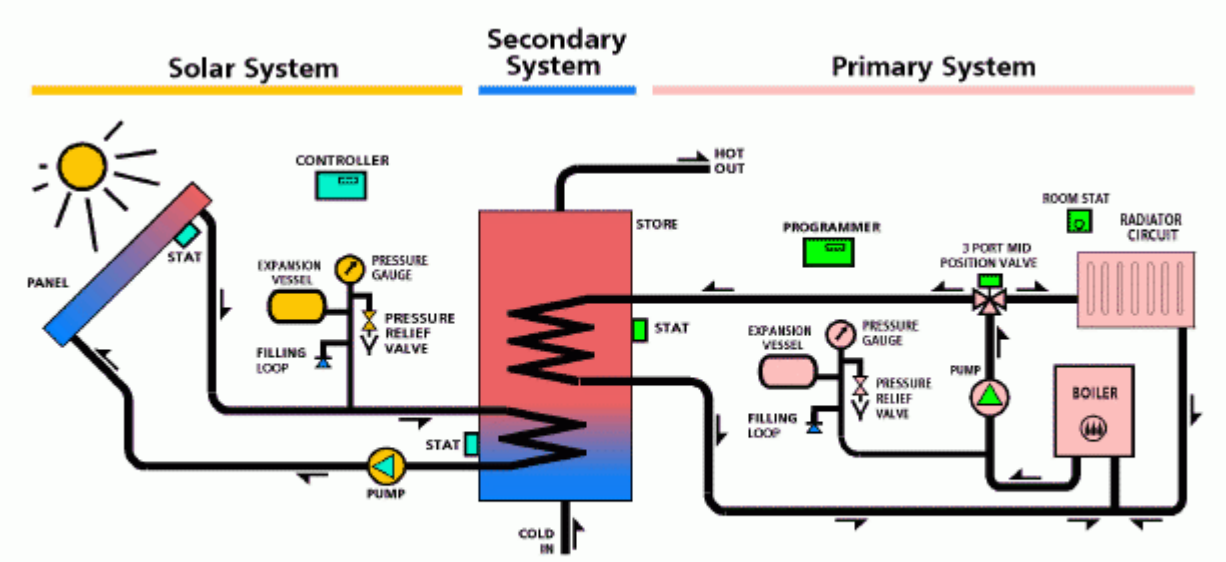

Comparison of a typical Sealed Solar System to a typical Sealed Primary System

Solar Panels:

The size of panels required for a domestic property is anywhere between $2m^2$ and $7m^2$, with panels fitted to the roof either using simple support brackets, or by recessing into the roof. The water in the solar system must usually be dosed with anti-freeze to prevent frost damage to the panels, however certain systems can overcome this.

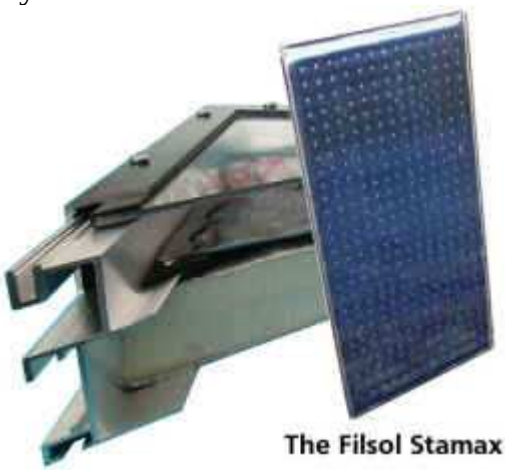
The Filsol Stamax

Flat Plate Collectors are made of a metal collector plate, usually copper, coated in special materials and fitted into an insulated box. Tubes running along the collector carry water, and heat is conducted from the surface of the collector into the water. The range of flat plate collectors is quite large offering very good value for money, with panels available from *AES* (as fitted at our own premises), *Filsol*, *Solar Sense*, *Powertech*, *Viessmann*, and others. Flat plate collectors can also be 'home-made' with a number of workshops around the country set up to provide training.

The *Solartwin* panel system is retro-fitted to an existing vented cylinder. The need for a controller is removed by the use of a second small photovoltaic panel to power a solar pump, which pumps cold water from the cold feed connection to a cylinder, returning it hot to the top of the cylinder via the hot water draw off. The panels can resist freezing as the collector tubes within the panel are made of rubber and will not burst, however protection may be needed against limescale build up within the solar system.

Evacuated Tube Collectors are constructed of glass solar collector tubes, containing a second inner tube with a selective coating. The space between the outer tube and inner tube is evacuated and maintained at a high vacuum eliminating all heat loss by conduction and convection. Solar radiation passes through the highly transparent outer glass tube and reaches the solar selective coating on the outside of the inner tube. The solar selective coating absorbs the solar radiation and converts it to thermal energy.

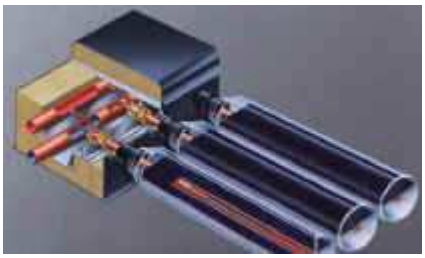


NEG Suntube

The first type of evacuated collectors are *Direct Flow Evacuated Tube Collectors* which heat up water flowing through the tubes. Panels worth noting are the *Riomay NEG Suntube* (20 year guarantee), the *Solamax* from *Thermomax*, the *Viessmann Vitosol 200*, and the *Seido 3 Combi-Collector* from *PowerTech* which has a built in 40 litre mains water store that can be used to provide a pre-heated water supply to a standard unvented cylinder or thermal store (also avoiding the need for a pump, controller, or anti-freeze).

The second type are *Evacuated Heat Pipe Collectors* and differ in that they consist of a heat pipe inside a vacuum-sealed tube. Each tube contains a sealed copper pipe (heat pipe) that is attached to a black copper fin absorber plate. As the sun shines on the black surface of the fin, alcohol within the heat tube is heated and hot vapour rises to the top of the pipe. Water, or glycol, flows through a manifold picking up the heat,

while the alcohol condenses and flows back down into the tube. Both the *Thermomax Memotron* tubes and the *Viessmann's Vitosol 300* tubes work on this principle, and both have the added advantage of built in overheat protection - when a programmed temperature has been achieved, a 'memory metal' spring expands and pushes a plug against the neck of the heat pipe blocking the return of the condensed fluid and stopping heat transfer.

Photo Voltaic Panels (PVs) convert sunlight into electricity. Although not as efficient as panels used to heat water, they have a huge variety of applications from the large-scale production of electricity in sunny countries to recharging the batteries in watches and calculators, however the only time they apply to plumbing is when used as an electricity source for pumps or controls.

The Solar Store:

The choice of store to use in conjunction with panels is dependent on the type and area of panels used. As the heat input from the panels cannot usually be limited, the store needs to be large enough to absorb all the heat delivered by the panels. Protection against overheating may be needed, however correctly matching the panel size to the size of the store should overcome this (the larger the store the less chance of overheat). A general rule for sizing stores is 60 litres per square metre of panel, however this will depend upon the panel efficiencies.

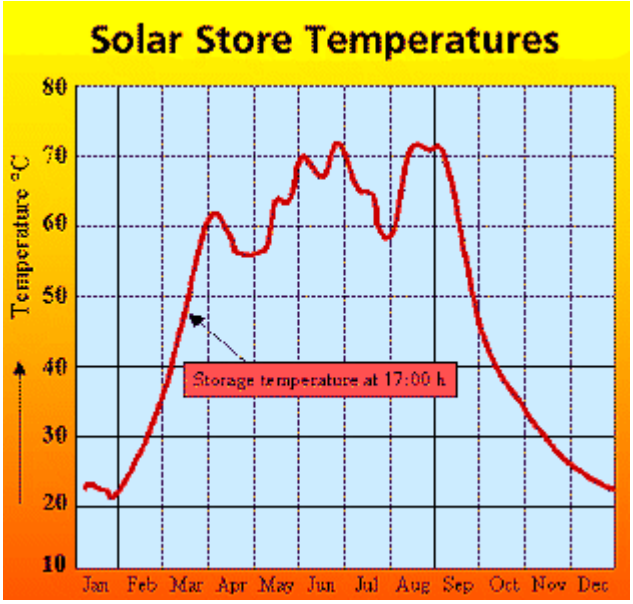

The most common type of store is a twin coil cylinder, with one coil at the bottom of the store dedicated to solar, and the second connected to a standard boiler system to provide heat when the solar input is not enough. Alternatively, two stores can be used, one heated by the solar, and one by the boiler. Solar versions of nearly all types of cylinder are available, and many panels can be supplied with their own dedicated solar store.

Drain-back systems overcome problems associated with freezing or overheat by allowing the water to drain out of the panels back into a thermal store during freezing or overheat. During normal operation, the solar pump forces water up to the panels. On some systems, the pump must be on to keep water in the panels, whereas some

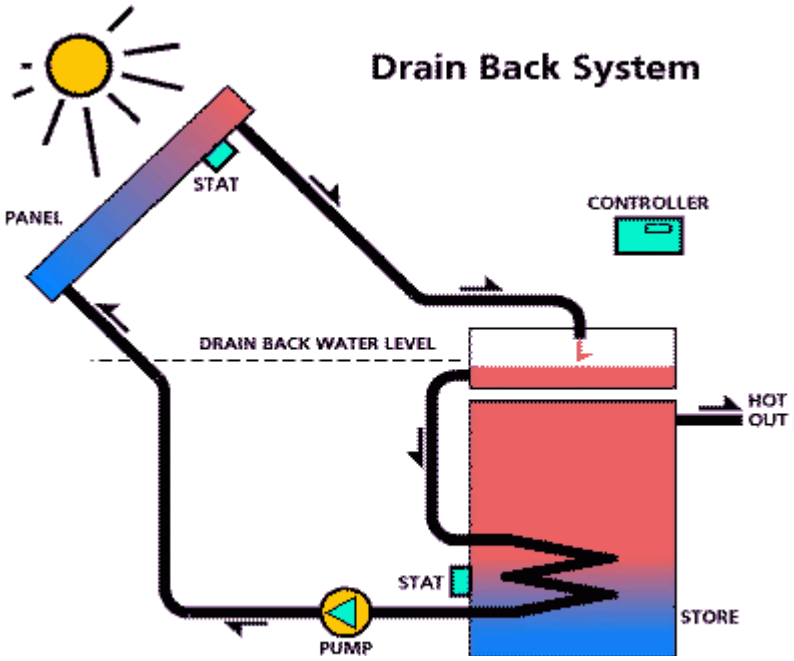

may make use a control
valve to allow water to drain. Thermostats on the panel or pipework can be used to sense freezing or overheat conditions respectively. With drain-back systems, special care must be taken to avoid air locks within the solar pipework.

Plate heat exchangers can be used to heat a hot water store that is not fitted with a dedicated solar coil, and as such can be used to convert cylinders to use solar. Ideally the store should have two spare bosses for connection to the heat exchanger. The exchanger transfers heat from pumped panel water to the store water, also pumped from the store. Heat exchangers are very efficient at transferring heat and are particularly suited to district or commercial applications.

Controls:

The choice of which solar controller to use will depend upon the type of system. A Basic system can make use of straightforward controllers, which are no more difficult to install than a central heating timeclock. Many include a digital read-out of water temperatures in the panels and store, and one should rarely need to use the more advanced controllers available. The controller will typically need wiring to two sensors (one on the solar panel, and one on the solar store or adjoining pipework), to the solar pump, and to the mains electrical supply. Pre-assembled controls packs are also available, such as *Solar Sense's Consol* unit, as well as fully pre-assembled units such as our own *DPS Cel-F Solar Heat Bank.*

DPS Solar Heat Banks

Summary:

The choice of which system to use comes down to a balance of panel efficiency, size, cost, the guarantees on the panels, the appearance of the panels, and simplicity of installation. One should obtain quotes and performance data for a variety of panel types, as well as looking at the cost of associated controls, before making a final decision. Although the range of systems available may seem a bit daunting at first, do not worry. They are all pretty similar in general operation, and should prove as easy as installing a typical boiler system.

Pandora Heat Banks, with Drain Down Solar

The Pandora Heat Banks are most popular hot water cylinder in our range. They can will outperform ANY other make of hot water cylinder in terms of flow rates, pressures, and ease of installation.

The Pandora can be connected to most types of solar panel directly, without the need for a coil, anti-freeze or additional overheat protection. The only limit for direct connection is that the solar panel must be within 4m from the base of the store, so that the panel can be filled by the positive head of the pump.

The only solar components required, apart from the Pandora and solar panel, are a standard 6m heating pump, a solar controller, a non-return valve, and pipework. The solar panels are filled with water from the Heat Bank, removing the need for separate filling and expansion controls.

To protect the water in the panels from freezing, the water can be drained out of the panel. This is activated by either the solar controller, or a separate frost thermostat. The panels will also drain during power cuts. Re-filling of the panel is done automatically once temperatures rise.

Unlike other drain-down or drain-back systems, the panel only empties of water during problem conditions, and not every time the solar pump turns off. This is a big improvement, as drain-back systems are often known to be noisy as a result of the continual draining and refilling.

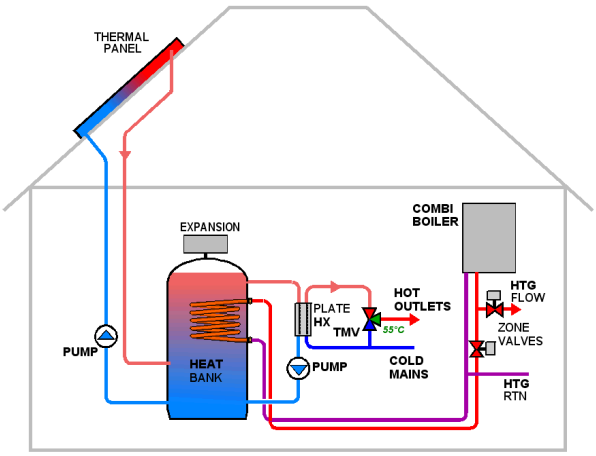

- Mains Pressure Hot Water (9 bar)
- Direct Connection to Solar Panels
- Pre-Fabricated, Wired & Tested
- Built in Drain-Down Frost Protection
- No Anti-Freeze or Pressurisation Kit
- No Discharge Pipes
- Fit & Forget
- 1 Year On-Site Backup
- 25 Year Guarantee on Store

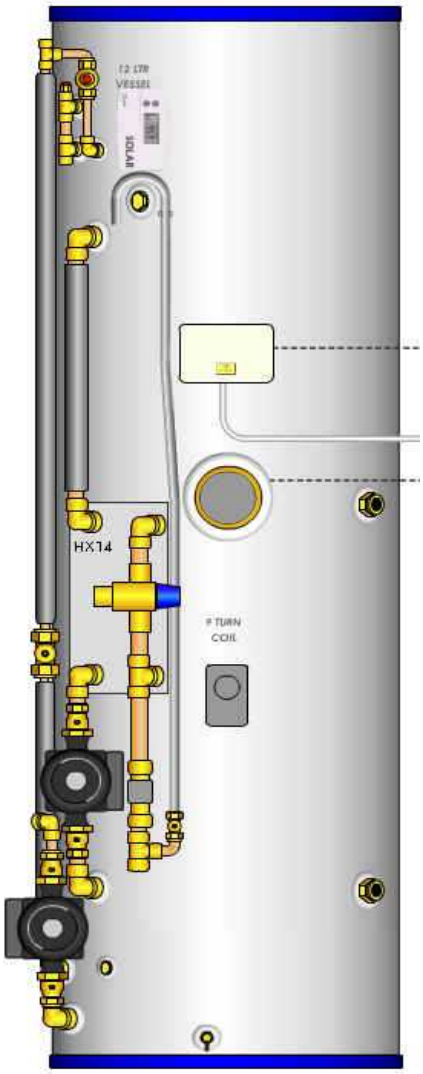

The Indirect Pandora Heat Bank with fitted Solar Controls
Patented DPS Technology

Heat Bank Design

CPC-180-ABNABX

- Manually Filled store - NO discharge pipe or overflow.
- 100kW Plate Heat Exchanger can heat 30 ltr/min of mains hot water, up to 6 bar pressure.
- Connects directly to solar panels on a unique drain down arrangement, that avoids any need for a solar coil, anti-freeze, or additional overheat protection.

KEY:

1 Plate heat exchanger, L18-14 (100kw)
2 Flow switch
3 Heat exchanger pump
4 Thermostatic mixing valve, RWC Heatguard 22mm
5 Drain off cock
6 Removable lid
7 White plastic coated steel casing
8 Anti-vacuum valve
9 Vent, with evaporation protection
10 Filling Point, with hose
11 Wiring Centre
13 Boost Immersion Heater
17 Cylinder Thermostat, Immersed [70°C]
18 Lockshield Balancing Valve, 22mm
19 Automatic Air Vent with Manual Vent
20 Hot Water Zone Valve, 22mm
21 Heating Motorised Valve, 28mm
28 Danfoss FP715 Two Channel Programmer
30 Danfoss RMT230 Room Thermostat
41 Spare bosses for Solar Drain Down
53 Y-Pattern Strainer

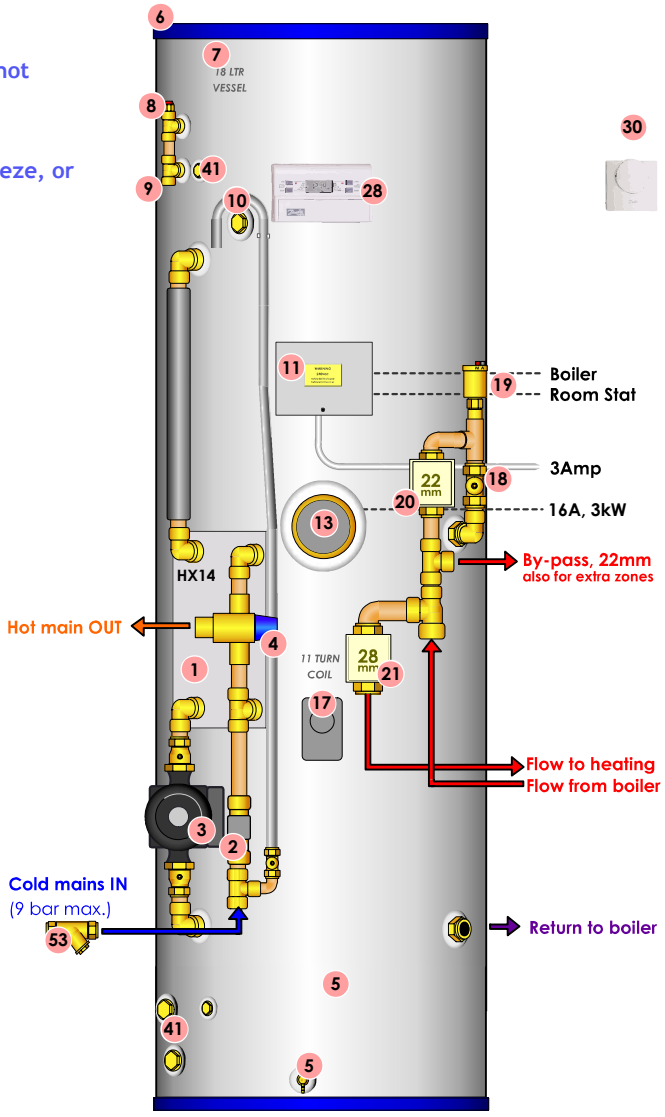

Not to Scale

Wiring Diagram:

CPC-180-ABNABX

Ensure Earth continuity throughout.

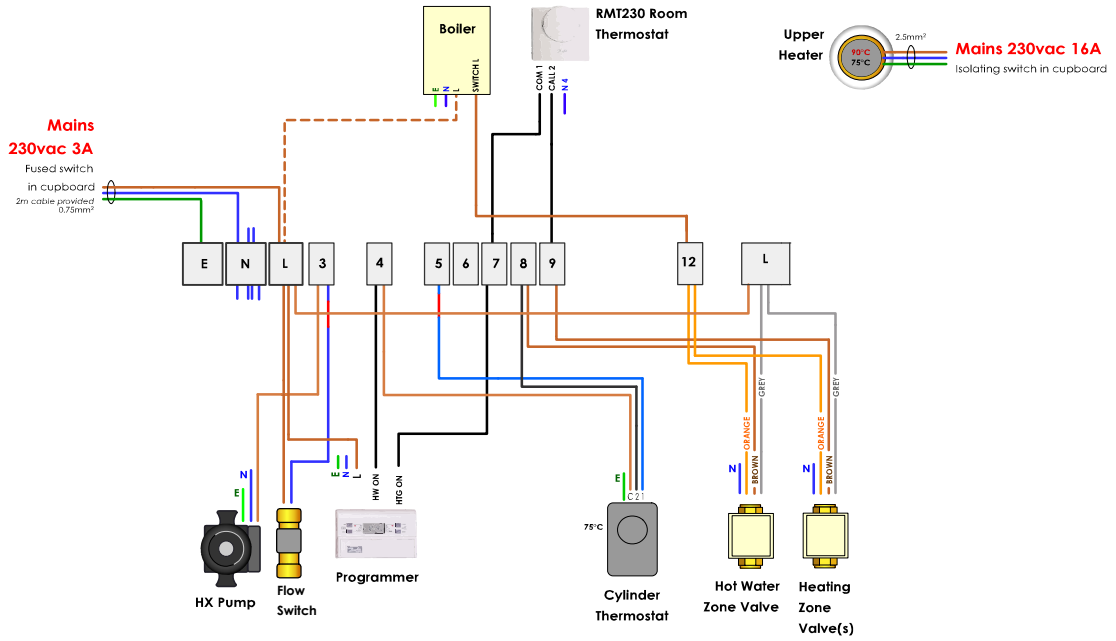

DEDICATED PRESSURE SYSTEMS LTD.

Telephone 01372 803 675
Fax 01372 803 678
Email dps@heatweb.com
Internet http://www.heatweb.com

SOLAR DRAIN DOWN HEAT BANKS

The Solar Drain Down option for DPS Heat Banks is aimed at integrating solar panels to the store in the simplest possible system.

- No coil - the water in the store is pumped directly into the panels, giving the maximum possible heat transfer into the store, while removing the need for pressurisation kit for the solar system.
- The panels can be drained to protect them from freezing or overheating, removing the need for anti-freeze or a solar heat dump (radiator).

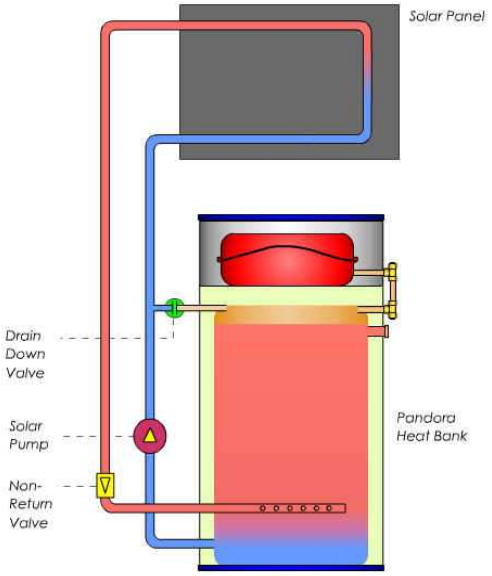

The panels are filled by pumping water from the Heat Bank up to the panel, using the positive pressure of the pump to lift the water up to the roof.

The Drain Down valve is shut, preventing the water from draining back into the store. When the pump turns off, the water remains in the panels under negative head.

The pump is turned on and off by the a Solar Controller that with power the pump when it detects the temperature in the panel is 5°C or more hotter than the store.

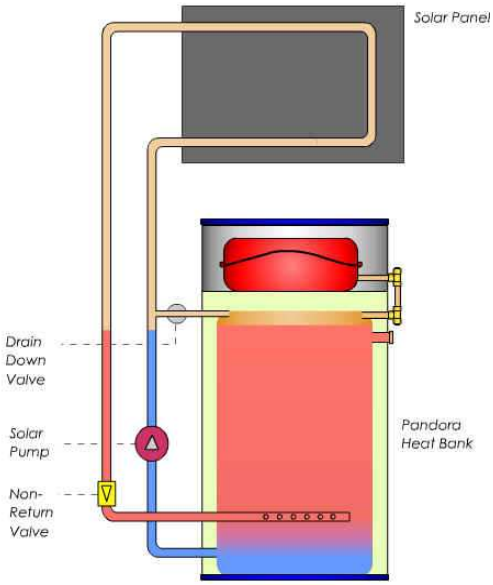

Under problem conditions such as freezing or overheat, it becomes necessary to drain the panels to prevent them from freezing or to prevent further heat input from the sun.

Drain down is achieved by opening the Drain Down valve, by removing power to it. Once open the valve allows air from the top of the store to clear up into the panels, and thereby let the water drop back into the store.

IMPORTANT: Some evacuated tube solar panels are not suitable for drain down operation. Please check with the proposed panel manufacturer in advance.

Heat Bank Design

CPC-180-ABNAB4

- Manually Filled store - NO discharge pipe or overflow.
- 100kW Plate Heat Exchanger can heat 30 ltr/min of mains hot water, up to 6 bar pressure.
- Connects directly to solar panels on a unique drain down arrangement, that avoids any need for a solar coil, anti-freeze, or additional overheat protection.

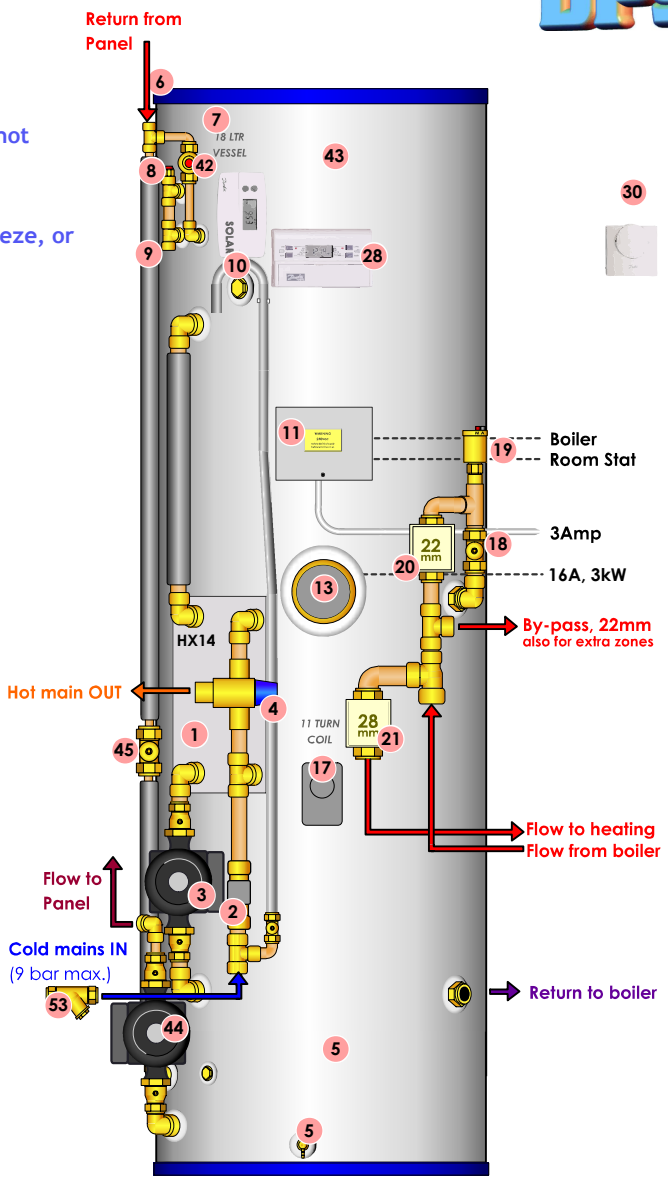

KEY:

1 Plate heat exchanger, L18-14 (100kw)
2 Flow switch
3 Heat exchanger pump
4 Thermostatic mixing valve, RWC Heatguard 22mm
5 Drain off cock
6 Removable lid
7 White plastic coated steel casing
8 Anti-vacuum valve
9 Vent, with evaporation protection
10 Filling Point, with hose
11 Wiring Centre
13 Boost Immersion Heater
17 Cylinder Thermostat, Immersed [70°C]
18 Lockshield Balancing Valve, 22mm
19 Automatic Air Vent with Manual Vent
20 Hot Water Zone Valve, 22mm
21 Heating Motorised Valve, 28mm
28 Danfoss FP715 Two Channel Programmer
30 Danfoss RMT230 Room Thermostat
42 Drain Down Valve
43 Solar Programmer
44 Solar Pump
45 Non-Return Valve
53 Y-Pattern Strainer

Wiring Diagram:

CPC-180-ABNAB4

Ensure Earth continuity throughout.

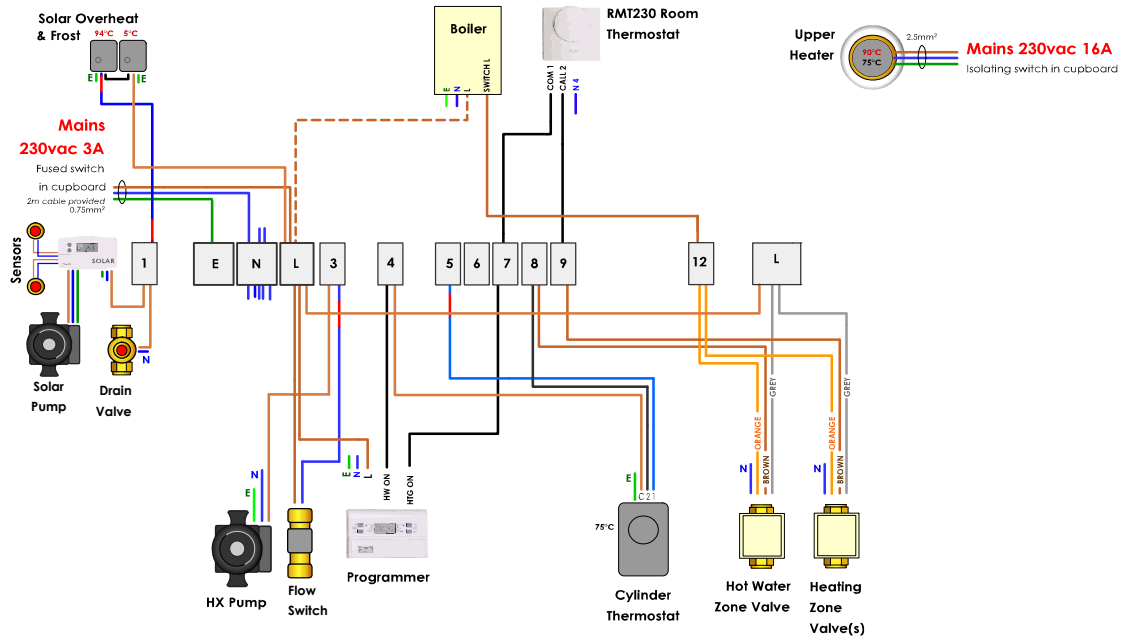

Heat Bank Design

CPC-180-ABNABS

- Manually Filled store - NO discharge pipe or overflow.
- 100kW Plate Heat Exchanger can heat 30 ltr/min of mains hot water, up to 6 bar pressure.

KEY:

1 Plate heat exchanger, L18-14 (100kw)
2 Flow switch
3 Heat exchanger pump
4 Thermostatic mixing valve, RWC Heatguard 22mm
5 Drain off cock
6 Removable lid
7 White plastic coated steel casing
8 Anti-vacuum valve
9 Vent, with evaporation protection
10 Filling Point, with hose
11 Wiring Centre
13 Boost Immersion Heater
17 Cylinder Thermostat, Immersed [70°C]
18 Lockshield Balancing Valve, 22mm
19 Automatic Air Vent with Manual Vent
20 Hot Water Zone Valve, 22mm
21 Heating Motorised Valve, 28mm
28 Danfoss FP715 Two Channel Programmer
30 Danfoss RMT230 Room Thermostat
32 Flow to solar coil, 22mm
33 Return from solar coil, 22mm
34 Solar Sensor Pocket
35 Overheat Relief Regulating Valve
36 Overheat Relief Discharge Valve
53 Y-Pattern Strainer

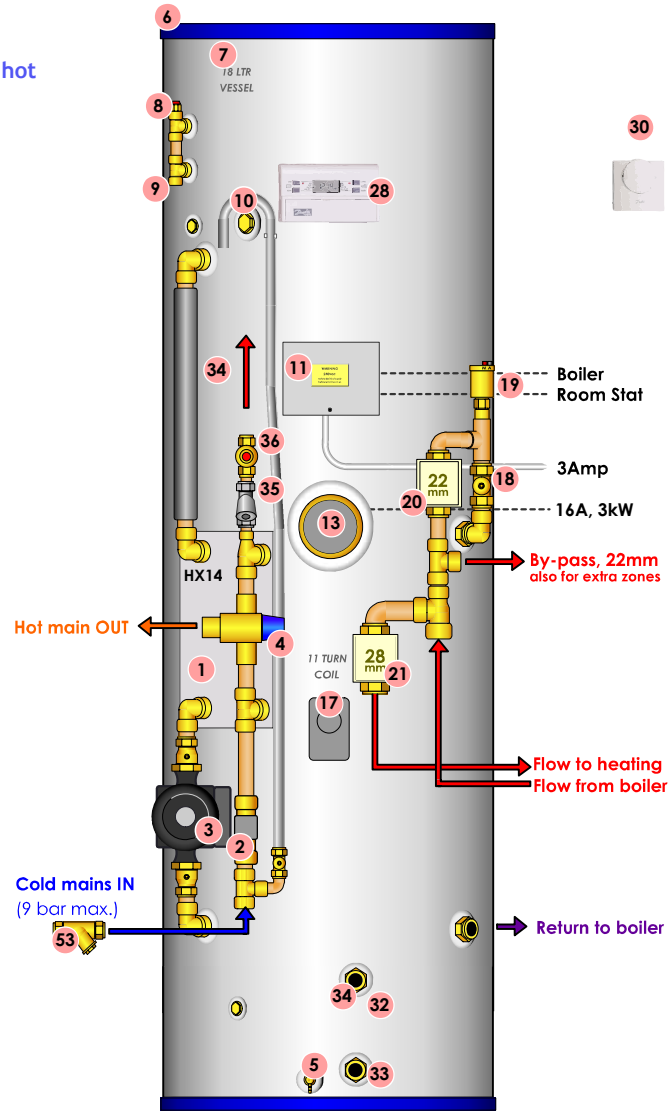

Not to Scale

Wiring Diagram:

CPC-180-ABNABS

Ensure Earth continuity throughout.

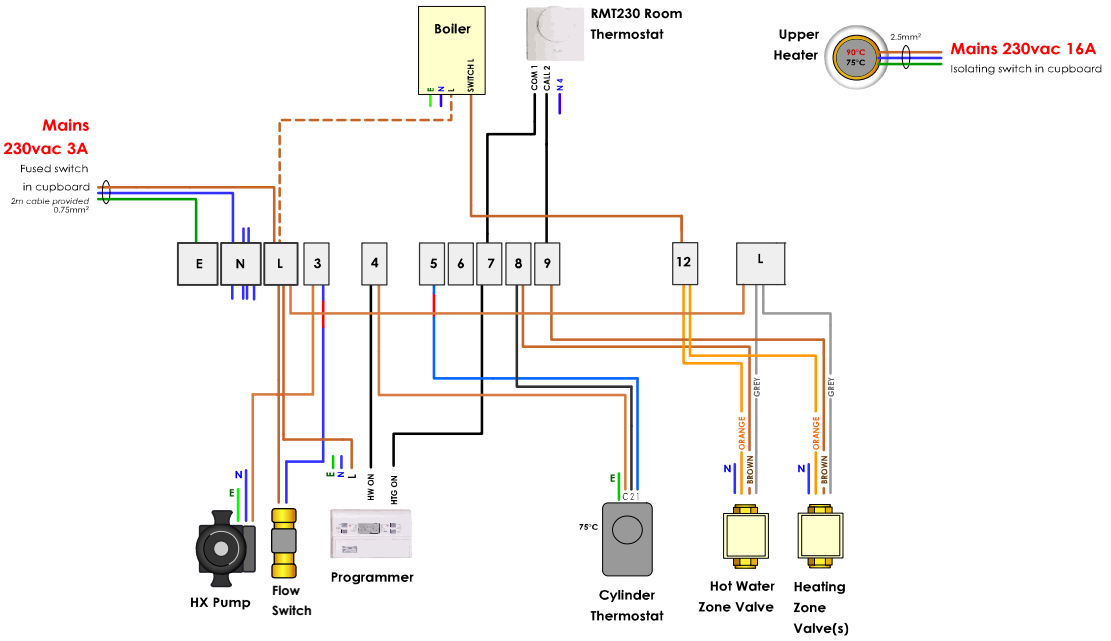

Heat Bank Design

CXC-150-ABADB-BEBV

- Connects to a Feed and Expansion Tank (max. 10m head).
- 100kW Plate Heat Exchanger can heat 30 ltr/min of mains hot water, up to 6 bar pressure.

KEY:

1 Plate heat exchanger, L18-14 (100kw)
2 Flow switch
3 Heat exchanger pump
4 Thermostatic mixing valve, RWC Heatguard 22mm
5 Drain off cock
7 White plastic coated steel casing
8 Vent
9 Cold Feed
11 Wiring Centre
13 Boost Immersion Heater
17 Cylinder Thermostat, Immersed [70°C]
28 Danfoss FP715 Two Channel Programmer
30 Danfoss RMT230 Room Thermostat
32 Flow to solar coil, 22mm
33 Return from solar coil, 22mm
34 Solar Sensor Pocket
40 Primary Return Valve, 22mm
44 Heating Pump 5m
53 Y-Pattern Strainer
55 Solid Fuel / Gravity 1" Connection

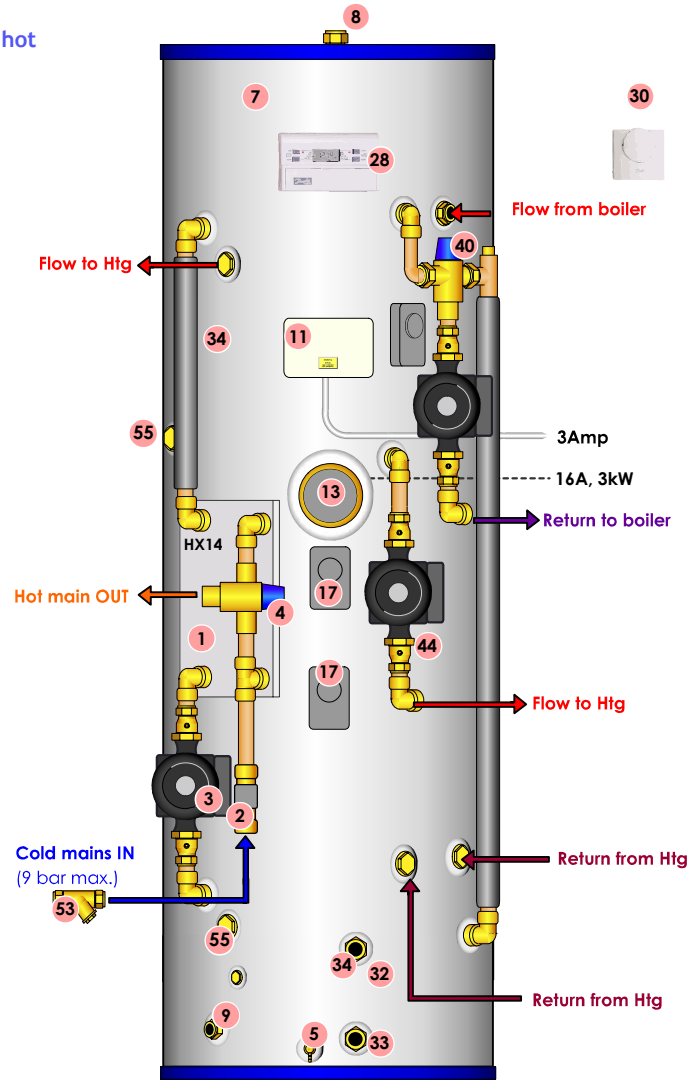

Not to Scale

Wiring Diagram:

CXC-150-ABADB-BEBV

Ensure Earth continuity throughout.

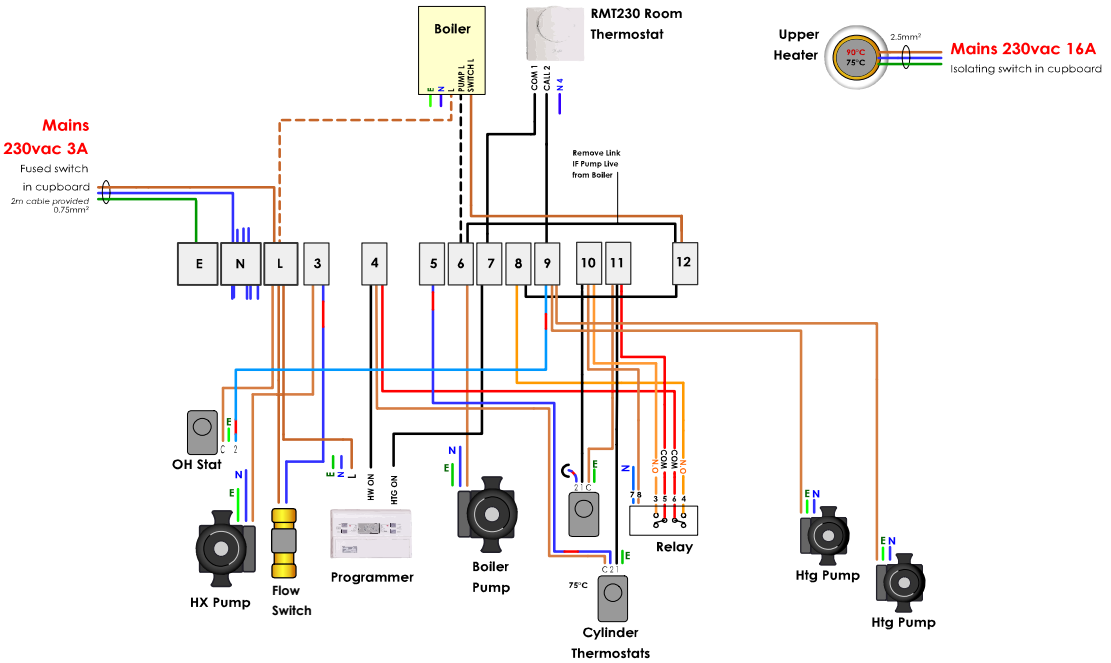

Heat Bank Design

CPC-180-ABNABX

- Manually Filled store - NO discharge pipe or overflow.
- 100kW Plate Heat Exchanger can heat 30 ltr/min of mains hot water, up to 6 bar pressure.
- Connects directly to solar panels on a unique drain down arrangement, that avoids any need for a solar coil, anti-freeze, or additional overheat protection.

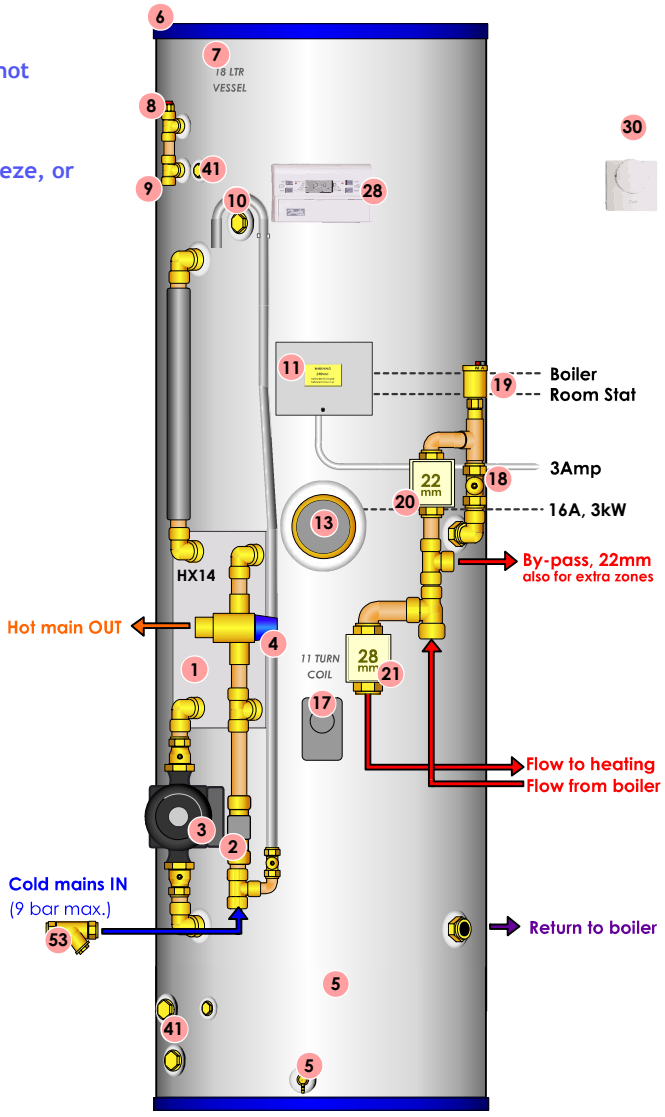

Not to Scale

KEY:

1 Plate heat exchanger, L18-14 (100kw)
2 Flow switch
3 Heat exchanger pump
4 Thermostatic mixing valve, RWC Heatguard 22mm
5 Drain off cock
6 Removable lid
7 White plastic coated steel casing
8 Anti-vacuum valve
9 Vent, with evaporation protection
10 Filling Point, with hose
11 Wiring Centre
13 Boost Immersion Heater
17 Cylinder Thermostat, Immersed [70°C]
18 Lockshield Balancing Valve, 22mm
19 Automatic Air Vent with Manual Vent
20 Hot Water Zone Valve, 22mm
21 Heating Motorised Valve, 28mm
28 Danfoss FP715 Two Channel Programmer
30 Danfoss RMT230 Room Thermostat
41 Spare bosses for Solar Drain Down
53 Y-Pattern Strainer

Wiring Diagram:

CPC-180-ABNABX

Ensure Earth continuity throughout.

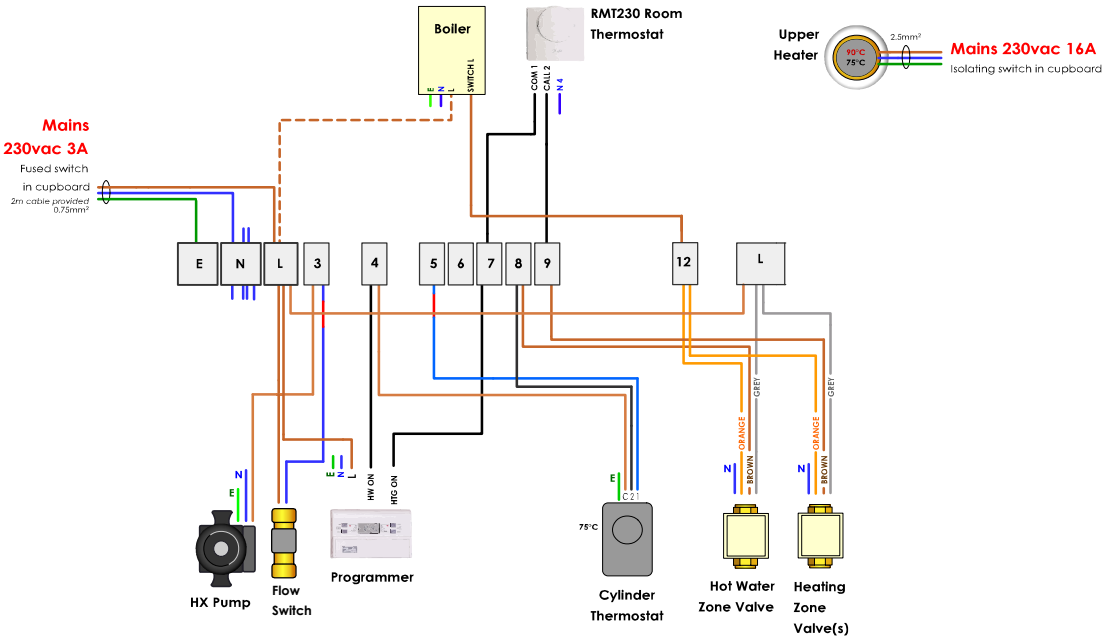

DPS
DEDICATED PRESSURE SYSTEMS LTD.

Telephone 01372 803 675
Fax 01372 803 678
Email dps@heatweb.com
Internet http://www.heatweb.com

the Institute of Plumbing ip INDUSTRIAL ASSOCIATE

Indirect +SOLAR TWIN COIL OPTIONS

Amazon MK2

Unvented Hot Water Cylinders

The Amazon Super cylinder has a Stainless Steel inner Vessel with a **25 YEAR guarantee**. It is highly insulated and finished in a White Steel Casing.

Quite simply, a very high quality laser welded stainless steel vessel, manufactured to the highest standards. The Amazon MK2 allows quick installation of the expansion vessel by screwing directly into the top of the cylinder, or if preferred this can be installed into the cold supply as standard. The use of an expansion vessel instead of an internal bubble, overcomes the problems of regularly recharging the bubble to avoid dripping discharge pipes.

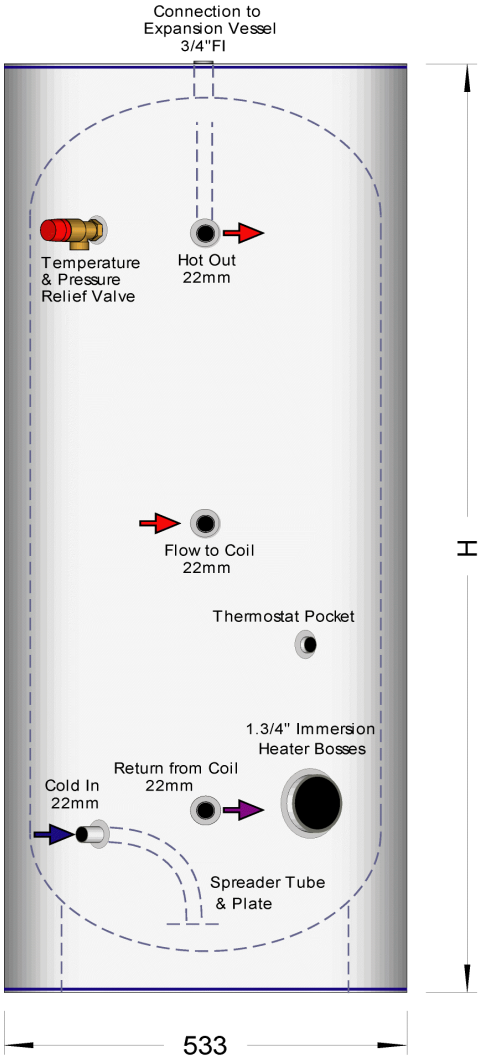

Inlet Pressure Reducing Valve set at: 3 bar
Temperature & Pressure Relief: 7 bar 90°C
Expansion Relief: 6 bar

Water Inlet Control assembly with filter and back feed protection, Immersion Heater, Combined Cylinder & Overheat Thermostat, Boiler Cut-Off Valve, Tundish, and Expansion Vessel are supplied loose for site installation.

INDIRECT AMAZON MK2
Unit sizes and details are as follows:

Unit Code	Capacity (litres)	Unit Height (mm)	Turns of Coil	Expansion Vessel (litres)
ASC-MK2-90-IND	90	755	8	12
ASC-MK2-125-IND	125	980	8	
ASC-MK2-150-IND	150	1105	9	
ASC-MK2-170-IND	170	1255	11	
ASC-MK2-200-IND	200	1455	12	
ASC-MK2-200-IND-TC SOLAR TWIN COIL	200	1455	12 + 9	
ASC-MK2-250-IND	250	1755	14	19
ASC-MK2-300-IND	300	2065	16	
ASC-MK2-300-IND-TC SOLAR TWIN COIL	300	2065	16 +9	

Our New 170 Litre Horizontal Hot Water Cylinder may be the perfect solution for your needs.
Overall Height 610mm. Overall Length 1247mm.

D.P.S. SOLAR CONVERSION SYSTEMS

TANK-FED HOT WATER SYSTEMS.

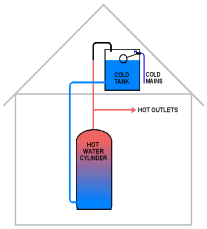

The following are ways of converting a standard tank fed cylinder installation to solar.

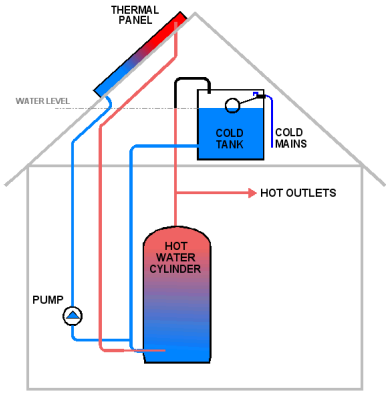

TANK-FED with DIRECTLY PUMPED PANEL

The simplest form of converting a vented system to solar. The cold feed is broken into and the water is pumped up into the panel using a bronze solar pump.

See Note #1.

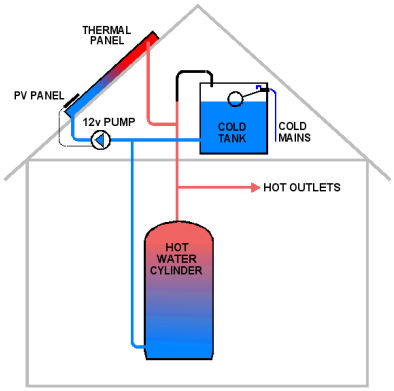

TANK-FED with DIRECTLY PUMPED PANEL, LOW VELOCITY D.C. SOLAR PANEL DRIVEN PUMP *"Solar-Twin"*

The Solar-Twin method of converting a vented system to solar. The cold feed and vent are broken into and the water is pumped up into the panel using a d.c. solar pump that is powered by a separate PV solar panel. Hot water is fed into the top of the store.

The Solar-Twin panel is flexible and immune to freezing or overheat.

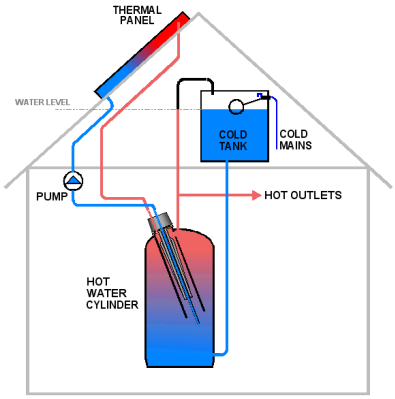

TANK-FED with DIRECTLY PUMPED PANEL via CONVERTED IMMERSION HEATER ASSEMBLY

A replacement immersion heater, developed by DPS, that converts a top entry immersion heater to also provide a flow and return from the base of the store to the solar panel. A bronze pump is used to fill and circulate water through the panels.

See Note #1.

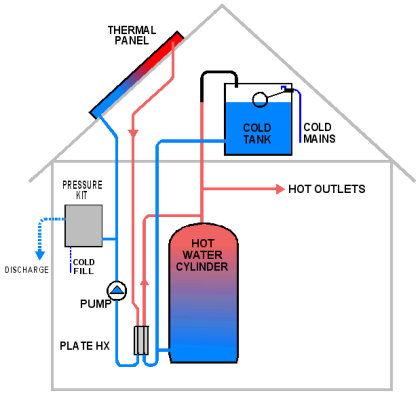

TANK-FED with PRESSURISED PANEL via PLATE HEAT EXCHANGER (Thermo-Syphon)

A sealed & pressurised solar system, connecting to the cylinder via a plate heat exchanger. Heat moves from the heat exchanger to the top of the store by gravity circulation.

See Note #2.

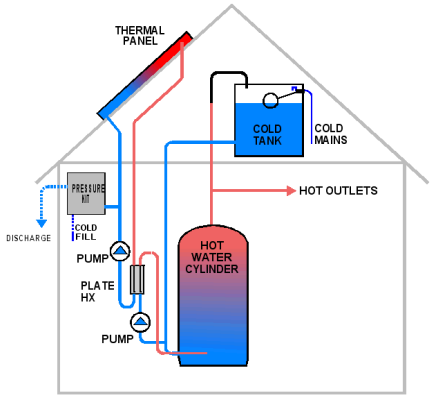

TANK-FED with PRESSURISED PANEL via PLATE HEAT EXCHANGER (Pumped)

A sealed & pressurised solar system, connecting to the cylinder via a plate heat exchanger. The cold feed is broken into to provide a flow and return to the heat exchanger on pumped circulation using a bronze pump.

See Note #2.

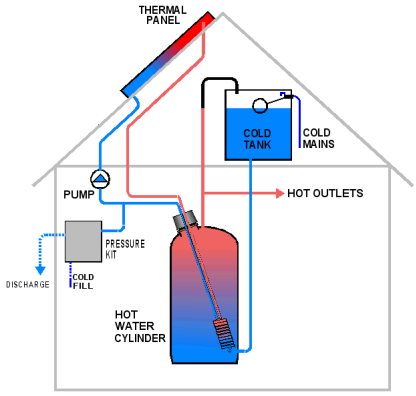

TANK-FED with PRESSURISED PANEL via IMMERSION HEATER COIL

A sealed & pressurised solar system, connecting to the cylinder via a flexible stainless steel coil that is inserted through an immersion heater boss.

See Note #2.

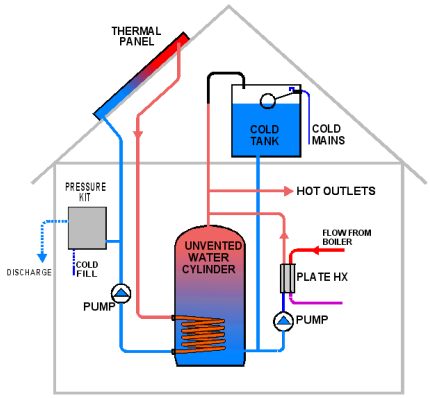

TANK-FED with PRESSURISED PANEL via PRIMARY HEATING COIL with PLATE RECOVERY

A sealed & pressurised solar system, connecting to the cylinder via the existing primary coil. To replace the coil a plate heat exchanger and bronze pump are added that will use the full boiler output to recovery the store from the top down.

This is the only form on converting that will allow a smaller volume of water to be heater by the primary heat source, hence leaving a solar reserve. The addition of rapid recovery makes up for the loss of storage.

See Note #2.

Note #1. The panel can be drained if necessary to protect from freezing or overheat, but panels must be suitable for potable water, as well as operating empty.

Drain down facility is added by the addition of a valve between the cold tank (above the water level) and the return from the solar panel. Under normal operation the valve is shut, and water is held in panel under negative head when pump is off. Under drain conditions, the valve opens allowing air to clear into the panel and the water to drop out.

Note #2. The panel will typically contain anti-freeze to protect from freezing, and additional requirements may be needed for overheat protection.

Sealed solar systems require the following pressurisation components: expansion vessel, filling loop (with connection to mains) and pressure relief valve (3 bar) with pressure gauge. A discharge is required, that can be taken to drain, or to a drum.