DPS heatweb
Saving Energy, Money & Time

Hot & Cold Water Systems

Product Data Sheets 2009


PUMP SETS


DISTRIBUTION SYSTEMS


UNVENTED SYSTEMS


PLATE HEAT EXCHANGERS

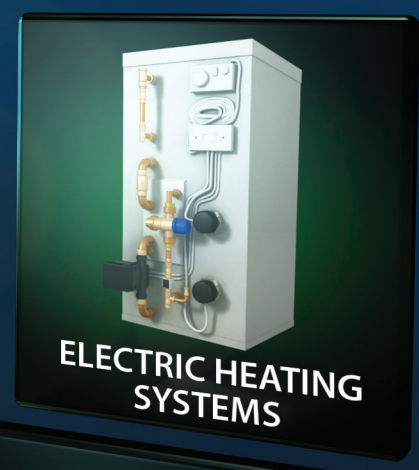
ELECTRIC HEATING SYSTEMS


THERMAL STORAGE


ANCILLARY CONTROLS


TANK FED SYSTEMS

Visit **www.heatweb.com**
or call **0845 241 1441** to find out more

Contents

DPS heatweb
Saving Energy, Money & Time

HOT WATER SYSTEMS...

Is there anything we haven't thought of?

Free Advice.

DPS have always provided free advice and system design, both domestic and commercial. Furthermore, our internet site has hosted free software and technical articles on all types of hot water system for over 10 years.

Fit and forget mains hot water systems with outstanding performance.

Take our Heat Banks for example. No annual maintenance requirements or discharge pipes. A Heat Bank can do everything an unvented can, plus a whole lot more, including higher pressures, a far greater range of sizes including four cylinder diameters as well as custom rectangular tanks, no need to use a registered installer and no need to notify building control. Technical advice is given on choosing the best system.

A comprehensive set of domestic system design software, available free of charge, with free technical consultancy backup.

It is no longer difficult to design a system that combines multiple heat sources (electric, gas, oil, solar, solid fuel, bio-mass or heat pumps) into a property. Answer a few basic questions and the software will do a preliminary design for you, providing system layout, wiring and installation instructions. It only takes a couple of minutes to use and requires only basic technical knowledge. Further discussion with our technical sales will help advance and finalise the most suitable design.

Customised and pre-fabricated systems to your exact requirements, fitted with your choice of controls, tested and ready for quick installation.

Effectively a plug-and-play hot water system that is designed to do whatever you desire and fit into whatever space you have. Circular or rectangular, vertical or horizontal, short and fat or tall and thin and with the combination of heat sources you wish to make use of or provide for future connection. To top it off, all the controls, pumps, programmers and valves are factory fitted, wired and tested, reducing the installers job to little more than connecting pipes. Just tell us your cupboard space and what you are trying to achieve... we'll do the rest.

Ancillary equipment to cover every requirement.

From silent low power pumps to high output pump sets, gas boilers to solar panels, programmers to underfloor heating kits. DPS aim to provide a single source for all domestic system hardware, with the technical backup to help you choose the best equipment for the job.

Service second to none.

As a family business we take great pride in our ability to satisfy every customer, from initial design through to on-site service backup. When you deal with DPS you can be confident that we care as much about satisfying your needs as we do about making a sale. As standard we provide one year on-site cover, two years guarantee on all components and typically twenty-five years guarantee on cylinders.

An Encyclopedia of Hot Water.

The freely available DPS CD-ROM contains information on all types of hot water and central heating systems. It is also packed with free software, including our latest system design software and HVAC calculators - everything required to design a complete system. Our PDF library has information and datasheets from across the industry, including a comprehensive section on solar hot water panels and systems and to top it off, the CD contains a complete copy of the DPS heatweb internet site.

Phone today for your FREE COPY

iphe INDUSTRIAL ASSOCIATE

clearskies

0845 241 1441
www.heatweb.com

DPS take the *'um'* out of Plumbing

How Epsom based designers and suppliers of plumbing systems, DPS, can help you solve all your hot water problems. Richard Hanson-Graville explains.

DPS design and manufacture the latest in hot water and central heating products for domestic homes, major house builders, local authorities and plumbers.

DPS started life as a family run consultancy, with a long history in manufacturing hot water systems. One of the first products designed and brought to the market was the Heat Bank range of thermal stores, the first domestic hot water cylinders to make use of a plate heat exchanger for mains pressure hot water. Having now been used extensively for ten years by major house builders and local authorities, the range has become a trusted solution with better performance and lower installation and maintenance requirements than alternative more conventional approcahes.

Although DPS have a standard basic range of cylinders, the options by no means stops there. All systems require controls of some sort, be they immersion heater controllers, boiler pumps, motorised valves or underfloor heating controls. These are usually assembled on site by the installer, to achieve the customers requirements. The more complicated a system gets, the more controls are required, and the design burden on the installer increases. Where a customer wished to combine a number of technologies the complexity can reach a point where more specialist installers are required.

DPS have the ability to pre-fabricate all the controls into a single ready-to-connect system, overcoming the more difficult design and installation requirements. Our pre-fabricated systems come with all controls piped up, wired and tested, and can be installed by any reasonable plumber. Many can even be legally DIY installed.

System are hand assembles to cutomers requirements (above). All systems are tested and setup to suit (below).

For private home-owners or pumbers who are installing a new hot water and heating system, we will first go over all the heat sources they wish to use. These can be electric heaters, a gas or oil boiler, wood burning stove, solid fuel cooker, solar panels, geo-thermal energy, or heat pumps. We then find out what they are trying to accomplish in terms of central heating, be it radiators, underfloor heating or a combination of both, and how they want to control it. Next we find out the hot water requirements; how many baths, or showers are typcally required, and what is the maximum use they wish to allow for. Finally we look at the cupboard space provided, as this can affect a design. All this can usually be done in a single phone conversation.

Armed with all the general technical information, we then put together a design that will do everthing that is asked for, and can be supplied pre-fabricated ready for easy connection to pipework. We supply full specifiactions, prices, and installation instructions, and talk the customer through the design, offering any options that have not been considered, and making any fine adjustments that are needed.

The approach is similar for architects, consultants, house

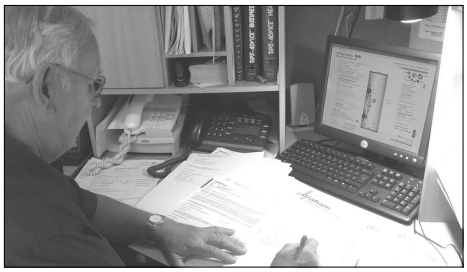

Experienced designers with computerised design service.

builders or local authorities, except that there may be some more specific requirments such as to use a particular manufacturers controls, or fit additional metering equipment.

DPS have worked closely with consultants over the years, and started life itself as a design consultancy. We know a great deal about designing both individual and multiple dwelling systems, the controls that are available, the best ways of connecting heat sources to loads, using storage to maximise energy efficiency, and we can provide free consultancy in all these fields.

We do the design work and provide finished designs for free becuase we believe customers who are informed will choose our products because they make sense. This is why you will find our website holds more generic techncial information than any other in the industry, and why we hand out free CD's packed with technical reading from a number of manufacturers, as well as free design software. We want you to understand the various options and systems so you can make an informed choice, rather than be guided by sales talk.

DPS's philosophy is simple: to manufacture or source the best solution to our customers requirements, and present customers with all the options and technical information to allow them to make an informed choice.

We try not to focus on a set range of products, but rather to offer the best solution, whatever it may be, and to enable us to do this better we have expanded our range by acting as distributors for what we feel are the best of the rest, including unvented cylinders, pumps, solar panels, underfloor controls and booster sets... sometimes a £125 pump will solve the problem, and we would prefer to offer this as a solution as well as maybe a brand new mains pressure system upwards of £500.

DPS provide one year on-site cover, two years guarantee on all components, and typically twenty-five years on any hot water cylinders from leaks.

Anyone wishing to learn more about what DPS can offer is always welcome to visit the Epsom showroom and factory where systems are on display and technical help can be provided.

Further reading and help:

DPS Heatweb Web Site: ***www.heatweb.com***
Online Domestic Design Software: ***www.dpsheatweb.com***
Solar Facts and Products: ***www.heatweb.com/solar***

The simplest system ever ?

The Electric Pandora Heat Bank provides mains pressure hot water and can be installed in 1 hour.

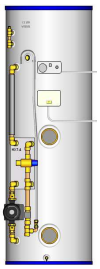

Probably our biggest ever seller, the Electric Pandora Heat Bank provides full mains pressure hot water up to nine bar pressure and at flows that can fill a bath in four minutes.

It only has two pipe connections, cold in and hot out, and is supplied fully pre-fabricated, with economy immersion heater controls and power supply cables ready for very quick installation.

To make life even better, the system has no annual maintenance requirements, and does not require a registered installer or notification to building control.

Tall and thin or short and fat ?

Not all cupboards are the same size, but DPS can provide systems to fit almost anywhere.

In an ideal worlds, one has a large cupboard or even a plant room for all the hot water equipment. In real life however, space in a property is often limited, and usually sacrifices have to be made to fit in a suitable sized hot water cylinder. To help overcome this, DPs can offer the same capacity stores in a number of sizes, including four circular stores and a variety of rectangular models. For example, all the cylinders below hold the same amount of water.

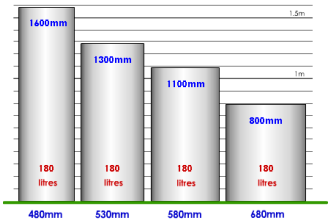

Everything Covered

Heat Bank Thermal Stores
Unvented Cylinders
British Standard Cylinders
High Output Tank Fed
Underfloor Heating
District Heating Systems
500 to 3000 ltr Cylinders
Commercial Equipment
Silent Booster Pump
Pumps and Pump Sets
Accumulators
Plate Heat Exchangers
Mains Conversion Kit
Solar Panels & Equipment
Integrated Solar Stores
Solar Pandora Heat Bank
Solar Unvented

Free Design & Consultancy
Free Design Software

1 Year On-Site Cover
2 Years Warranty on Parts
10 Years on Copper Stores
25 Years on Stainless Stores

Our showroom and factory are located in Epsom, Surrey, are are fitted with working demonstrations systems for a number of technologies including thermal storage and solar. Please phone DPS on 01372 803 643 / 675 for product information or to arrange a visit.

An Encyclopedia of Hot Water and Central Heating

The latest DPS CD ROM contains technical information on all types of hot water system, as well as articles, products and links to helpful web sites. The CD also contains free software including the lates domestic system designer covering gas, electric, solar, solid fuel, geothermal, and underfloor heating.

Phone for your FREE COPY
01372 803 643 / 675

Dedicated Pressure Systems Ltd.
Tel 01372 803 675 / 643
Fax 01372 803 678
Email Sales@heatweb.com

iphe INDUSTRIAL ASSOCIATE
clearskies
Approved Manufacturer

www.heatweb.com

HEAT BANK Thermal Storage Systems

PANDORA vs UNVENTED

A comparison of Pandora Heat Bank Thermal Stores to Unvented Hot Water Cylinders

1 HIGHER PRESSURES AND FLOW RATES

UNVENTED: limited in the pressure they can supply to taps by a pressure reducing valve, typically in the region of 3 bar.
PANDORA: pressures up to 9 bar to hot taps, mains providing.

2 NO DISCHARGE PIPES

UNVENTED: require a discharge pipe and tundish to protect against over-pressurisation of the store. Common for discharge to spill over tundish onto floor.
PANDORA: requires none.

3 NO SPECIAL TRAINING

UNVENTED: require a person to possess an industry recognised qualification to install or service.
PANDORA: requires none.

4 NO NEED TO NOTIFY BUILDING INSPECTOR

UNVENTED: installations should be reported to, and inspected by, the building inspector, as according to the G3 building regulations for unvented, pressurised cylinders.
PANDORA: requires none.

5 NO ANNUAL MAINTENANCE

UNVENTED: should be regularly serviced to check operation of safety controls. Cylinders using an internal bubble for expansion may also need this re-charged to prevent dripping discharge pipe.
PANDORA: requires no regular maintenance, other than renewal of corrosion inhibitor every 3 to 5 years.

6 NO LIME-SCALE IN STORE

UNVENTED: as water is heated, limescale is deposited onto the inside walls of the cylinder, and on heating surfaces. Fresh limescale is introduced with each draw-off, and this cannot be flushed out.
PANDORA: it is the same water in the store in 10 years as the day it was installed, so no limescale build-up. Plate heat exchanger is relatively immune, but can be easily flushed if needed.

All the advantages, None of the disadvantages.

Pandora Heat Bank Thermal Stores

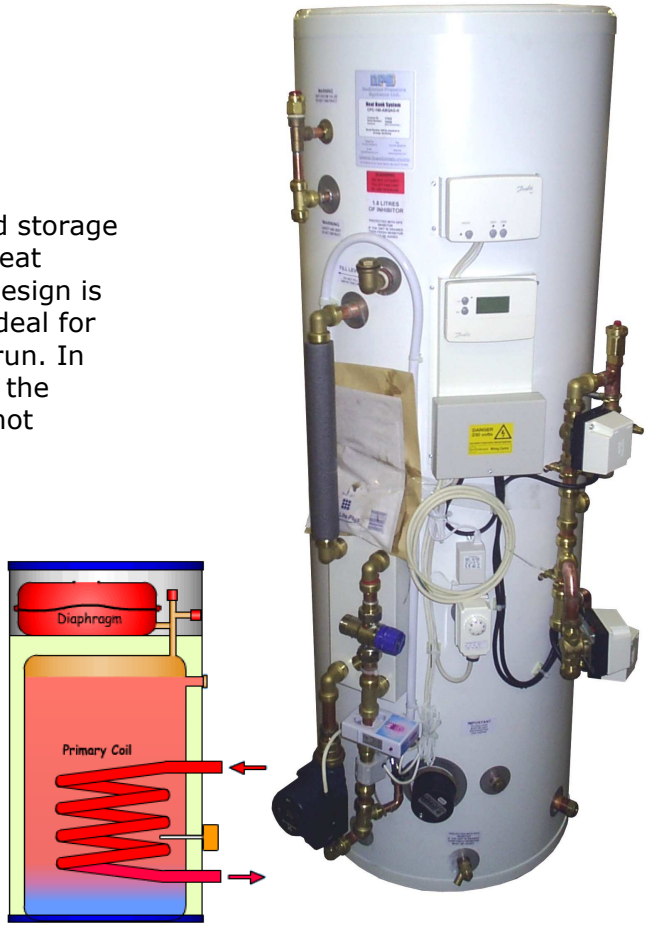

Mains Pressure Hot Water Systems using unpressurised storage for the high performance mains hot water via a plate heat exchanger (PHE). The unique feature of the patented design is the lack of a discharge pipe from the store, making it ideal for apartments or other places where pipework is hard to run. In addition, there is no annual servicing required, making the Pandora the simplest ways of obtaining high pressure hot water.

- Mains Pressure Hot Water up to 9 bar.
- Unpressurised system suitable for DIY installation.
- No discharge from store.
- Indirect and Electric models.
- Ability to run central heating from stored water.
- Rapid recovery option using PHE instead of coil.
- Cased with 40mm Insulation
- Choice of Diameters and Heights.
- Solar options.
- Options for additional immersion heaters.
- Cased units available.
- Additional bosses on request.
- Options for fitted control assemblies.
- No Annual Maintenance Requirements.

Plate Heat Exchanger Technology:
Mains pressure hot water is heated through a plate heat exchanger that pulls heat from the stored hot water. The store itself is unpressurised, overcoming all safety and servicing demands that arise from a pressurised store.

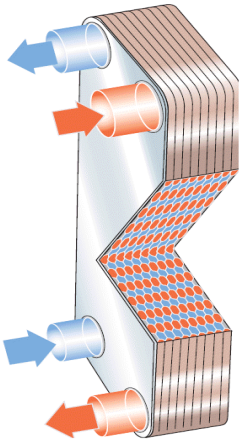

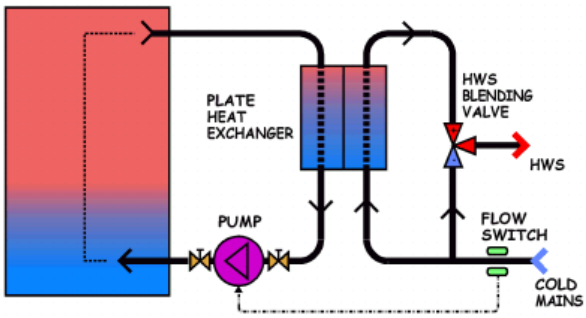

STANDARD OPTIONS	
DHW Heat Exchanger	100, 160, 300 kW
Thermostatic DHW Mixer	22, 28mm
Secondary Return Pump (Grundfos)	15-14, 15-50
Indirect Primary Coil	9 to 16 turn
Rapid Recovery via PHE	
Primary Control Assemblies	Y-Plan, S-Plan
Primary Motorised Valves	22, 28mm
Boiler Pump (Grundfos)	15-60, 25-55
Sealed System Kit on Primary	
Heating Circuit, Full Store	22, 28mm
Heating Circuit, Lower Store	22, 28mm
Heating Pump Grundfos (Grundfos)	15-60, 25-55, 25-80
Modulating Heating Pump	
Underfloor Heating Valve	22, 28mm
Programmer	One, Two Channel
Programmable Room Thermostat	TP5000, TP7000
RF Radio Communication with Room Thermostat(s)	1, 2, 3 Zone
Immersion Heater	3, 6 kW
Immersion Heater Controller	3, 15kW
Solar Coil	
Sealed System Solar Controls	
Direct Solar or Heat Pump Connections	
Direct Solar Controls	
Overheat Thermostatic Switch (wired to heating)	
Overheat Discharge (mains hot water to drain)	

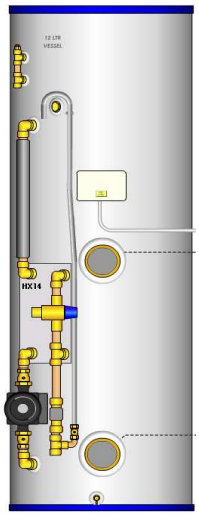

Standard Electric:
The most basic form of Pandora is the standard electric model. The unit only has two pipework connections, cold in & hot out, and can be installed in a fraction of the time of comparable hot water systems. The unit can be supplied with a pre-wired immersion heater controller, reducing the electrical installation further.

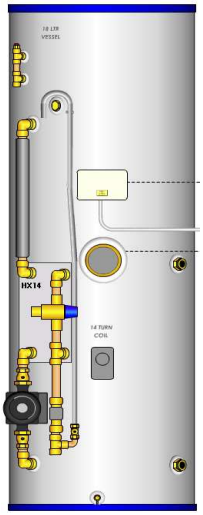

Standard Indirect:
The indirect model is fitted with a high recovery coil that allows connection to any gas or oil boiler system. The unit is perfect for customers wishing to swap from a standard tank fed system with minimal effort, as the store has the same four connections - cold in, hot out, flow from boiler, and return to boiler. The only difference is the cold in comes from the mains rather than from the cold tank.

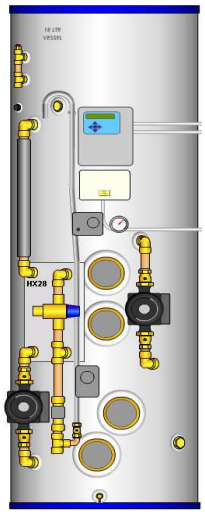

Electric Hot Water and Central Heating:
The Pandora can be used to provide a stand alone electric hot water and wet central heating systems, without the need for any other boilers, tanks, controls, or even a discharge. The unit has the unique ability to run the central heating using stored heat from cheap rate electricity, making it a serious alternative to gas.

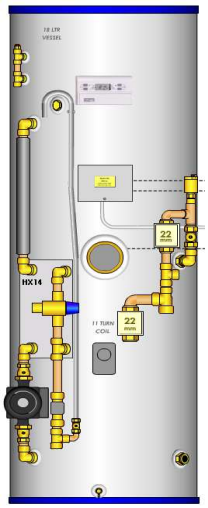

Prefabricated Indirect:
The indirect Pandora can be supplied with the full array of central heating controls fully assembled and wired onto the side of the unit. This ensures a rapid installation, both mechanically and electrically, with little to be done other than connect to pipework and wire to the boiler. The choice of controls is endless, with customers able to specify the make and layout of the supplied controls.

Rapid Indirect Recovery Options:
Instead of using a coil to allow connection to a boiler, the Pandora can be supplied with a plate heat exchanger (PHE) to reheat the store using everything the boiler can provide. This reduces heat up times dramatically, and reduces the size of store required.

System Design made Easy:
Pandora Heat Banks can be easily designed online on the DPS web site using our PANEX System Designer. Systems are fully assembled and wired to match the chosen design, tested and supplied ready for a rapid installation.

On-site backup is provided as well as two years guarantee on all components, and ten years on all copper cylinders (twenty on stainless).

STANDARD SIZES (COPPER)		
CAPACITY	DIAMETER	HEIGHT
130 ltr	530mm	1150mm
150 ltr	530mm	1300mm
180 ltr	530mm	1550mm
180 ltr	580mm	1300mm
210 ltr	530mm	1750mm
210 ltr	580mm	1500mm
210 ltr	680mm	1150mm
250 ltr	530mm	2000mm
250 ltr	580mm	1700mm
250 ltr	680mm	1300mm
300 ltr	580mm	2000mm
300 ltr	680mm	1550mm
350 ltr	680mm	1800mm
400 ltr	680mm	1950mm
415 ltr	680mm	2000mm

Rectangular Tanks can be supplied upon request to specified width, depth and height.

Dedicated Pressure Systems Ltd.
17 Manor Green Road, Epsom, Surrey KT19 8RA
Tel. 0845 2411441 Fax. 01372 803678

www.heatweb.com
email: sales@heatweb.com

Heat Bank Design

CPC-150-ABBAA

- Manually Filled store - NO discharge pipe or overflow.
- 100kW Plate Heat Exchanger can heat 30 ltr/min of mains hot water, up to 6 bar pressure.

KEY:

1 Plate Heat Exchanger, L18-14 (80kW)
2 Flow switch
3 Heat Exchanger Pump
4 Thermostatic mixing valve, RWC Heatguard 22mm
5 Drain off cock
6 Removable lid
7 White plastic coated steel casing
8 Anti-vacuum valve
9 Vent, with evaporation protection
10 Filling Point, with hose
11 Wiring Centre
13 Boost Immersion Heater
17 Cylinder Thermostat, Immersed [70°C]
53 Y-Pattern Strainer

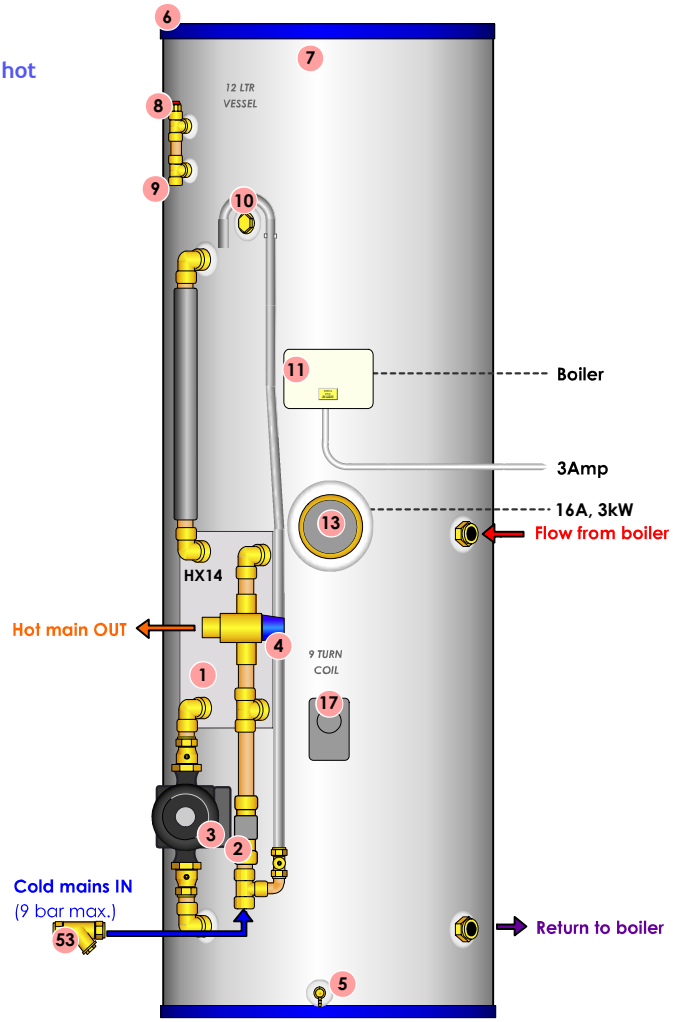

Not to Scale

Wiring Diagram:

CPC-150-ABBAA

Ensure Earth continuity throughout.

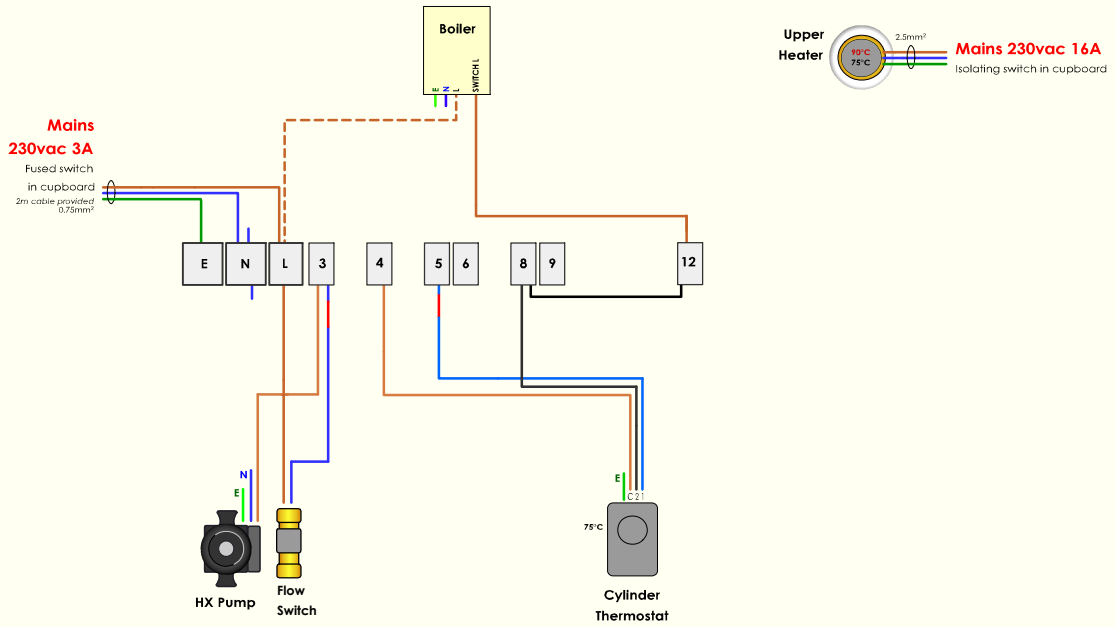

Heat Bank Design

CPC-150-ABIAJ

- Manually Filled store - NO discharge pipe or overflow.
- 100kW Plate Heat Exchanger can heat 30 ltr/min of mains hot water, up to 6 bar pressure.

KEY:

1 Plate Heat Exchanger, L18-14 (80kW)
2 Flow switch
3 Heat Exchanger Pump
4 Thermostatic mixing valve, RWC Heatguard 22mm
5 Drain off cock
6 Removable lid
7 White plastic coated steel casing
8 Anti-vacuum valve
9 Vent, with evaporation protection
10 Filling Point, with hose
11 Wiring Centre
13 Boost Immersion Heater
17 Cylinder Thermostat, Immersed [70°C]
18 Lockshield Balancing Valve, 22mm
19 Automatic Air Vent with Manual Vent
20 Three Port Motorised Valve, 22mm
23 Primary pump, Grundfos UPS15-50
28 Danfoss FP715 Two Channel Programmer
30 Danfoss RMT230 Room Thermostat
53 Y-Pattern Strainer
60 Plate Heat Exchanger CB18-30
61 Htg Exchanger Pump
62 Sensor Point
63 Flow Setter

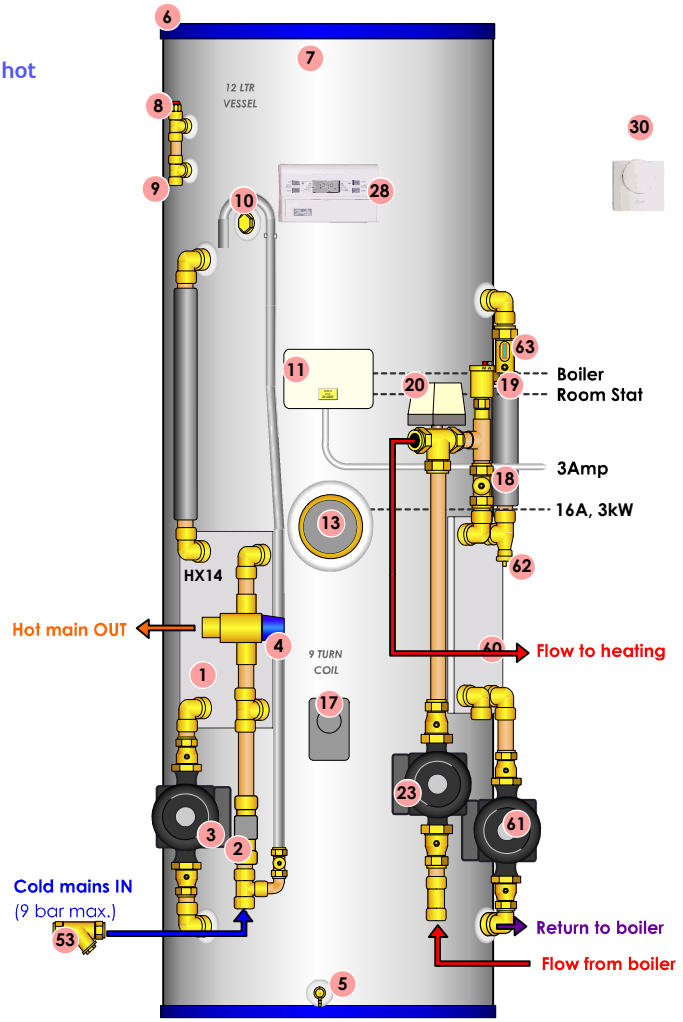

Not to Scale

Wiring Diagram:

CPC-150-ABIAJ

Ensure Earth continuity throughout.

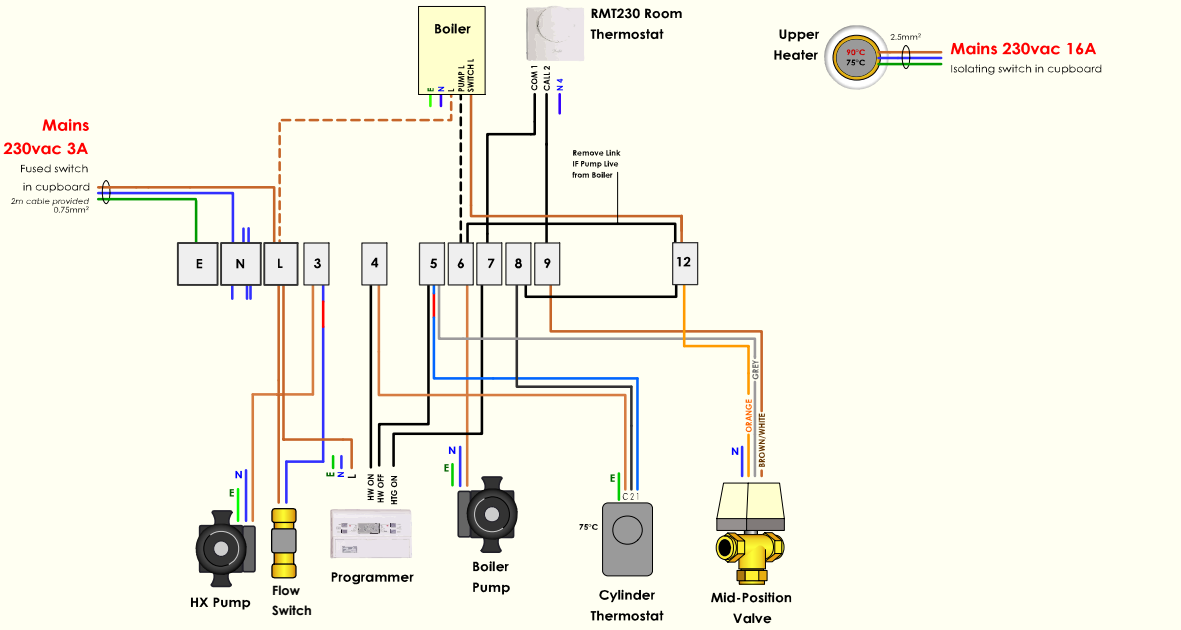

Heat Bank Design

CPC-250-DBVCGL-UFH

- Manually Filled store - NO discharge pipe or overflow.
- 160kW Plate Heat Exchanger can heat 45 ltr/min of mains hot water, up to 6 bar pressure.

KEY:

1 Plate Heat Exchanger, L18-28 (160kW)
2 Flow switch
3 Heat Exchanger Pump
4 Thermostatic mixing valve, RWC Heatguard 28mm
5 Drain off cock
6 Removable lid
7 White plastic coated steel casing
8 Anti-vacuum valve
9 Vent, with evaporation protection
10 Filling Point, with hose
11 Wiring Centre
13 Boost Immersion Heater
17 Cylinder Thermostat, Immersed [70°C]
18 Lockshield Balancing Valve, 22mm
19 Automatic Air Vent with Manual Vent
20 Hot Water Zone Valve, 22mm
21 Heating Motorised Valve, 28mm
22 Heating Motorised Valve, 22mm
23 Primary pump, Grundfos UPS25-55
24 Automatic By-Pass Valve, 22mm
25 Primary expansion vessel, 18 litre
26 Primary Pressure relief valve with gauge, 3 bar
27 Primary filling loop
28 Danfoss TS715 Programmer (Hot Water)
29 Danfoss RX1 Radio Reciever
30 Danfoss TP7000 Programmable Thermostat
32 Flow to Solar Coil
33 Return from Solar Coil
34 Solar Sensor Pocket
37 Underfloor Heating Mixing Valve, 28mm
38 Underfloor Heating Pump, Grundfos 15-60
53 Y-Pattern Strainer

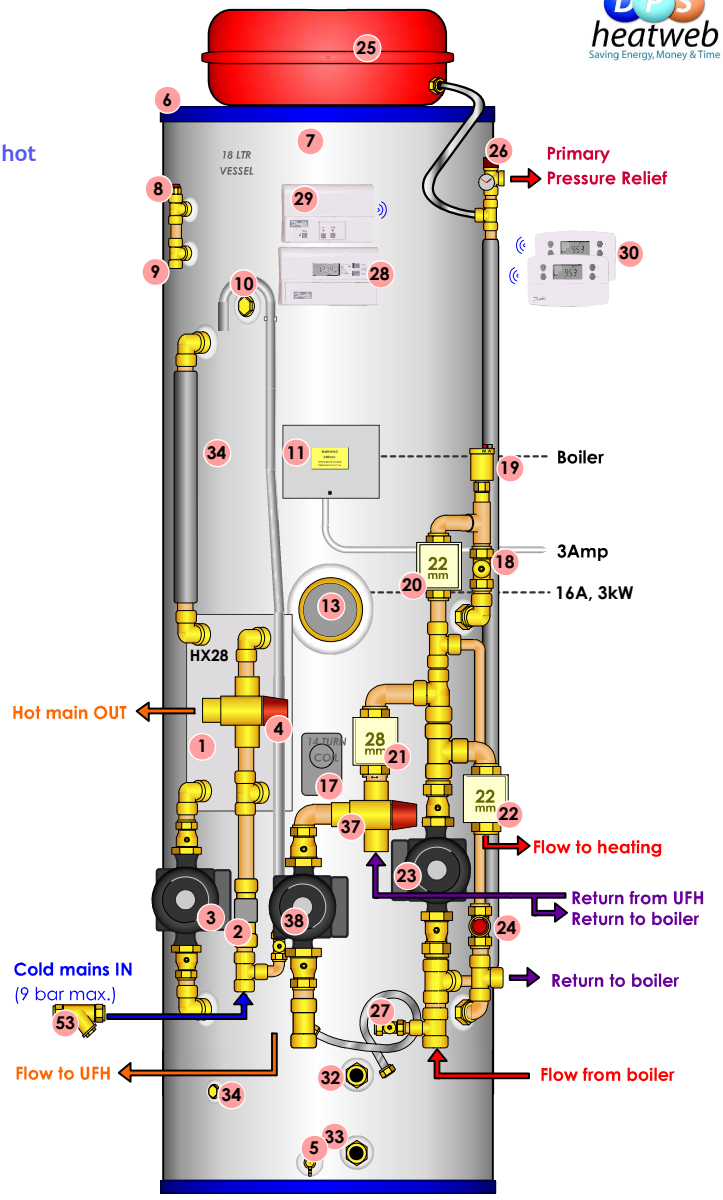

Not to Scale

Wiring Diagram:

CPC-250-DBVCGL-UFH

Ensure Earth continuity throughout.

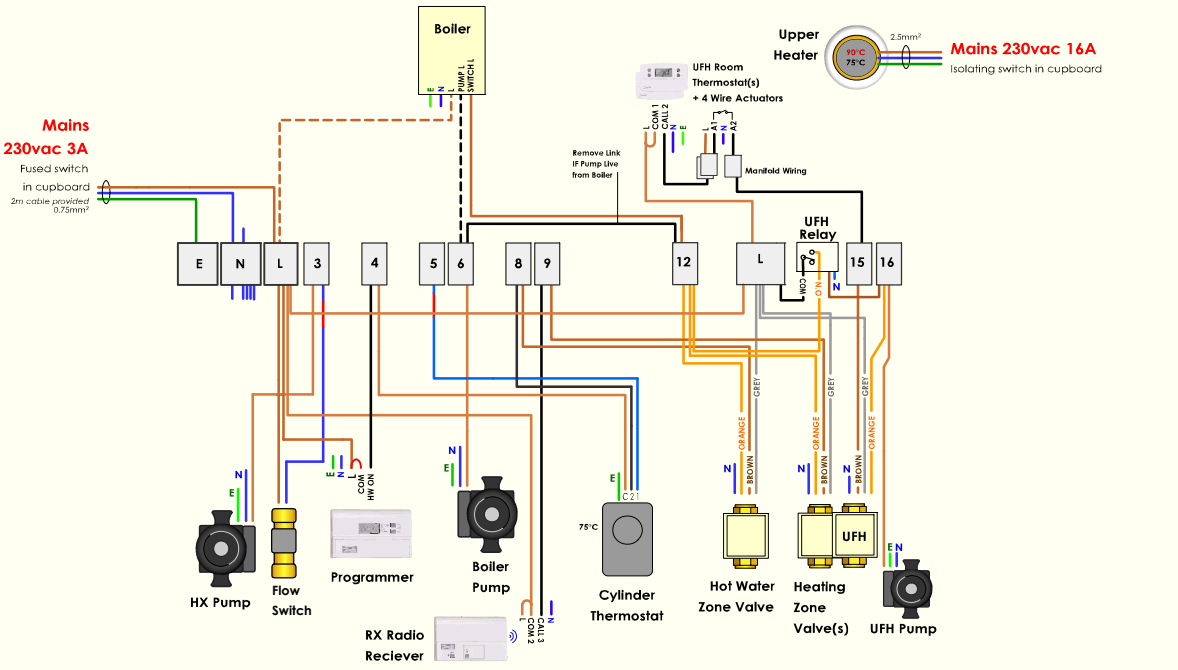

Heat Bank Design

CPC-180-APA

- Manually Filled store - NO discharge pipe or overflow.
- 100kW Plate Heat Exchanger can heat 30 ltr/min of mains hot water, up to 6 bar pressure.

KEY:

1 Plate Heat Exchanger, L18-14 (80kW)
2 Flow switch
3 Heat Exchanger Pump
4 Thermostatic mixing valve, RWC Heatguard 22mm
5 Drain off cock
6 Removable lid
7 White plastic coated steel casing
8 Anti-vacuum valve
9 Vent, with evaporation protection
10 Filling Point, with hose
11 Wiring Centre
13 Boost Immersion Heater
14 Economy Immersion Heater
16 Economy/Boost Immersion Heater Controller
53 Y-Pattern Strainer

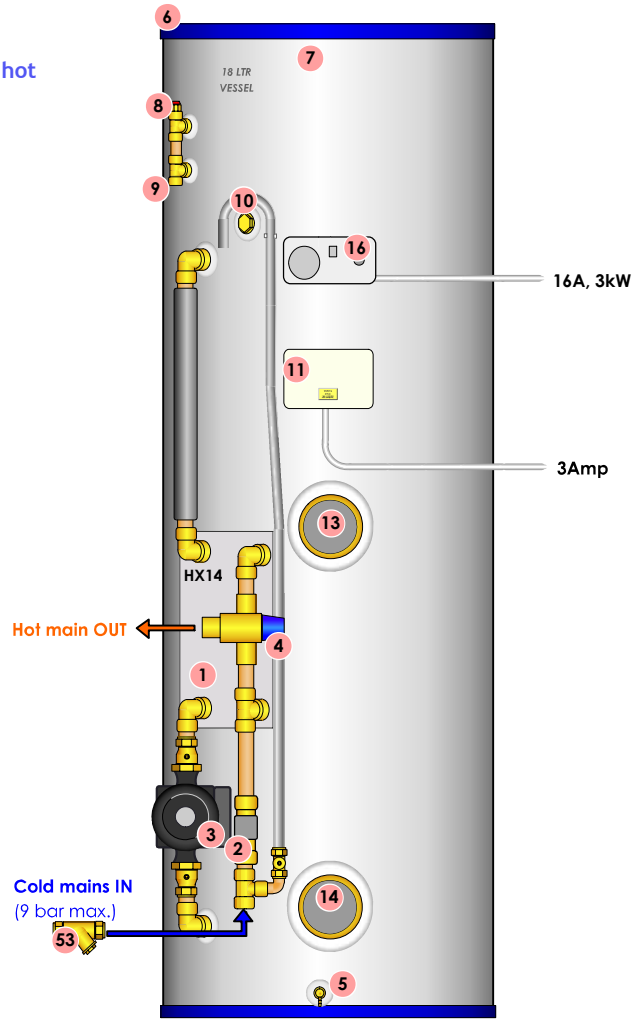

Not to Scale

Wiring Diagram:

CPC-180-APA

Ensure Earth continuity throughout.

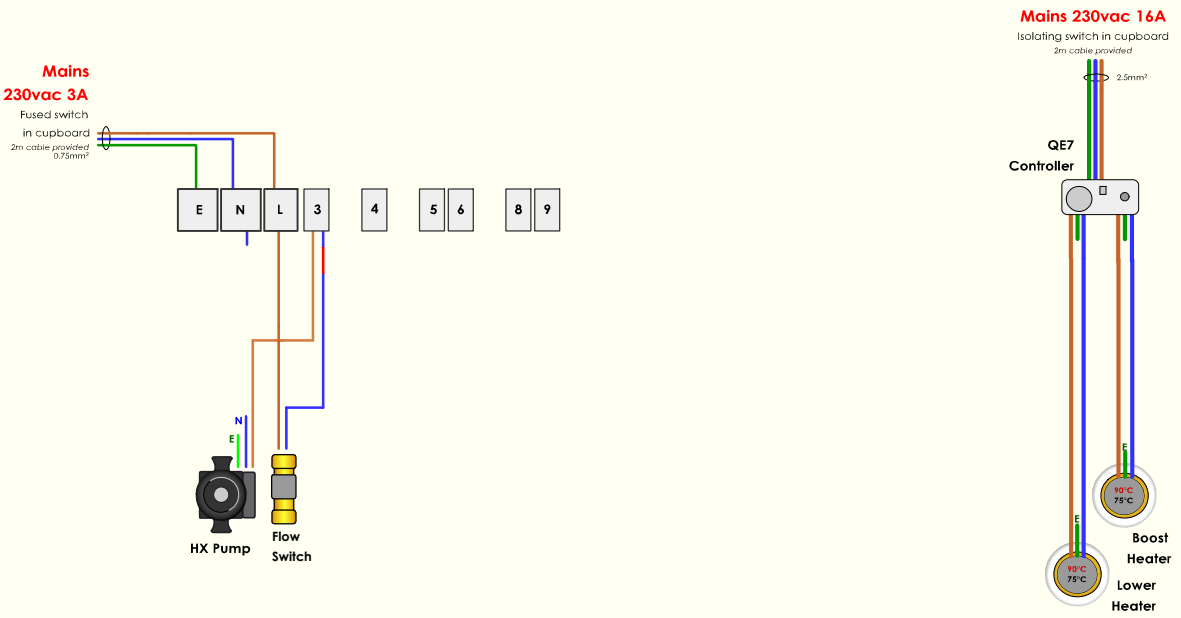

Heat Bank Design

CPC-250-APAAB-EAAB

- Manually Filled store - NO discharge pipe or overflow.
- 100kW Plate Heat Exchanger can heat 30 ltr/min of mains hot water, up to 6 bar pressure.

KEY:

1 Plate Heat Exchanger, L18-14 (80kW)
2 Flow switch
3 Heat Exchanger Pump
4 Thermostatic mixing valve, RWC Heatguard 22mm
5 Drain off cock
6 Removable lid
7 White plastic coated steel casing
8 Anti-vacuum valve
9 Vent, with evaporation protection
10 Filling Point, with hose
11 Wiring Centre
13 Boost Immersion Heater
14 Economy Immersion Heater
16 Economy/Boost Immersion Heater Controller
19 Automatic Air Vent
25 Expansion Vessel, 18 litre
26 Pressure Relief Valve (3 bar) with Gauge
28 Danfoss FP715 Two Channel Programmer
30 Danfoss RMT230 Room Thermostat
32 Flow to Solar Coil
33 Return from Solar Coil
34 Solar Sensor Pocket
42 Filling Point / Drain
43 Solar Controller (Resol BS4)
44 Solar Pump (6m)
45 Non-Return Valve
53 Y-Pattern Strainer

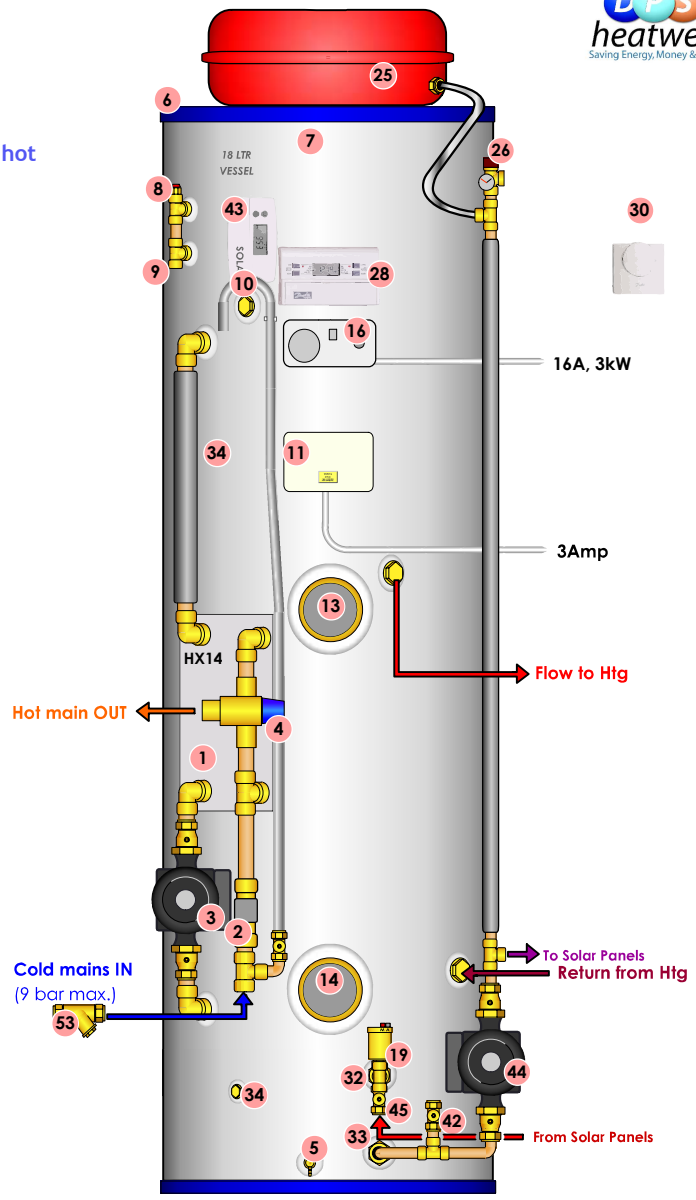

Not to Scale

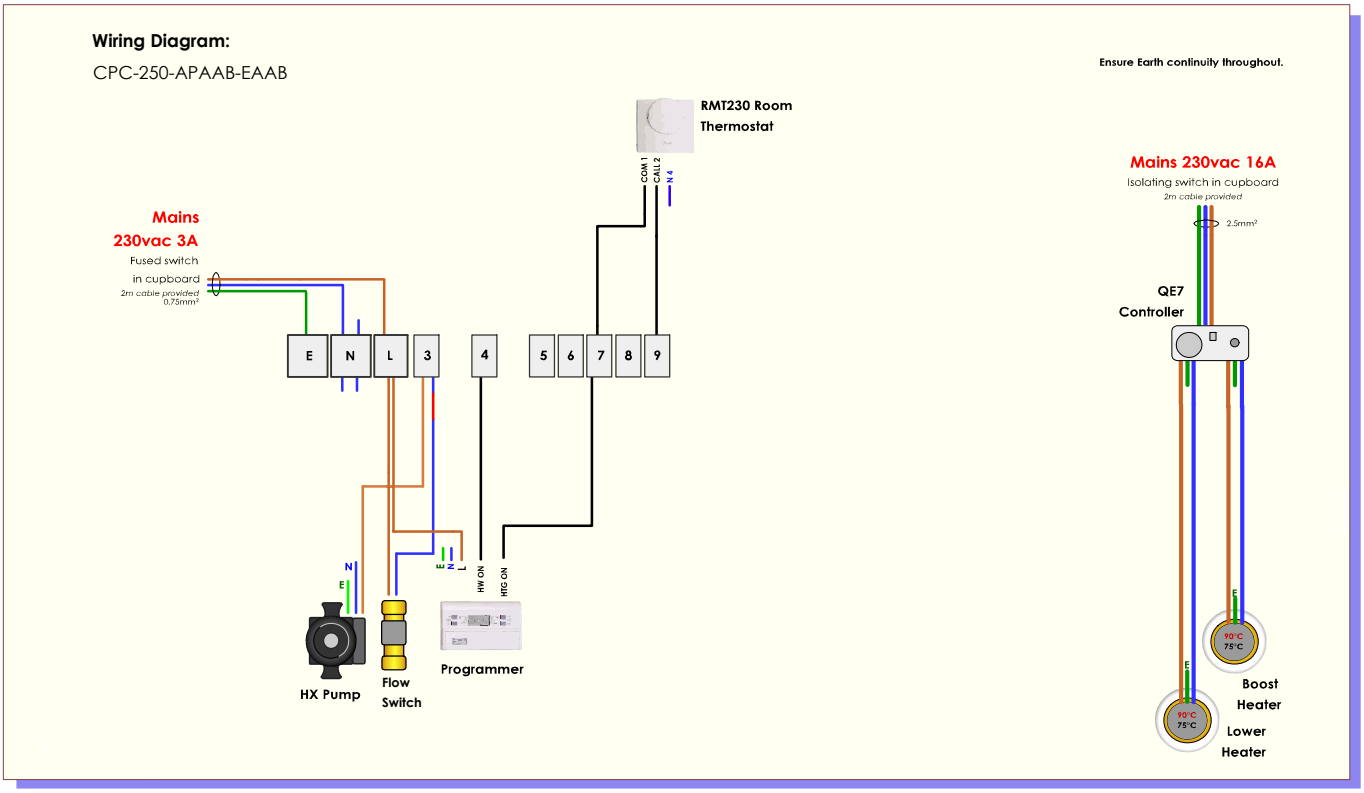

GX Heat Bank Thermal Storage Systems

Mains Pressure Hot Water Systems using Vented Storage for the highest performance from any hot water systems in our range. Particularly well suited to multiple heat sources or variable hot water loads, there are few applications where the GX is not the best option.

- Mains Pressure Hot Water up to 9 bar.
- Fully Vented system suitable for DIY installation.
- Integrated into Vented Boiler and Heating system.
- Rapid Recovery using full boiler output.
- Control over volume heated by boiler.
- Ability to shower continuously from a small store.
- Rapid heat up of radiators.
- Cased with 40mm Insulation
- Choice of Diameters and Heights.
- Solar and Solid Fuel options.
- Ability to use solar or solid fuel towards central heating.
- Options for fitted immersion heaters.
- Cased units available.
- Additional bosses on request.
- Options for fitted control assemblies.
- No Annual Maintenance Requirements.

250 litre GX Heat Bank with controls for Boiler, Radiators, Underfloor Heating, and Mains Hot Water with Solar Coil.

Plate Heat Exchanger Technology:
Mains pressure hot water is heated through a plate heat exchanger that pulls heat from the stored hot water. The GX itself is unpressurised, overcoming all safety and servicing demands that arise from a pressurised store.

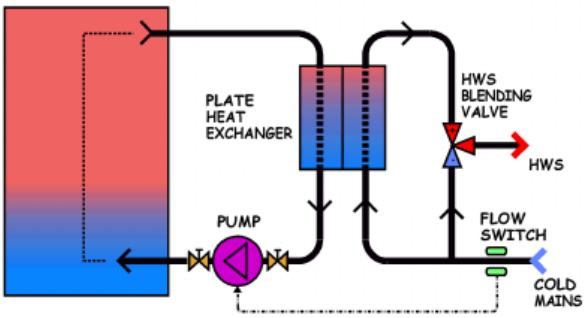

STANDARD OPTIONS	
DHW Heat Exchanger	100, 160, 300 kW
Thermostatic DHW Mixer	22, 28mm
Secondary Return Pump (Grundfos)	15-14, 15-50
GX Boiler Return Control	22, 28mm
Boiler Pump (Grundfos)	15-60, 25-55, 25-80
Twin Cylinder Thermostats	
Heating Circuit, Full Store	22, 28mm
Heating Circuit, Lower Store	22, 28mm
Heating Pump Grundfos (Grundfos)	15-60, 25-55, 25-80
Modulating Heating Pump	
Underfloor Heating Valve	22, 28mm
Programmer	One, Two Channel
Programmable Room Thermostat	TP5000, TP7000
RF Radio Communication with Room Thermostat(s)	1, 2, 3 Zone
Immersion Heater	3, 6 kW
Immersion Heater Controller	3, 15kW
Solid Fuel Connections 28mm	
Solar Coil	
Sealed System Solar Controls	
Direct Solar or Heat Pump Connections	
Direct Solar Controls	
Overheat Thermostatic Switch (wired to heating)	
Overheat Discharge (mains hot water to drain)	

Primary Integration:
The GX System is part of the boiler and radiator (primary) system, and connects to a feed and expansion tank located higher than all radiators and associated pipework. Water is pumped directly from the store to the boiler and returns hot into the top of the store, without any coils to limit transfer. Likewise, central heating is pumped straight from the store to radiators or to underfloor heating manifolds, which in turn heat up very rapidly.

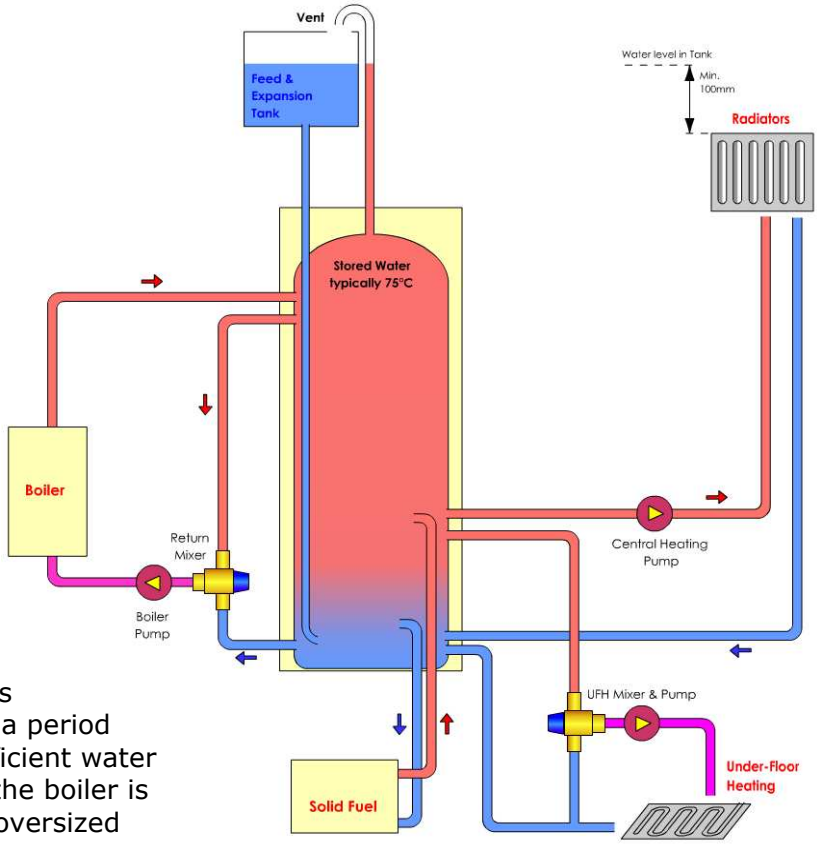

Buffered Operation of Boiler:
With the GX Heat Bank the boiler is effectively disconnected from the central heating, and is only used to reheat the store when required. This allows central heating to run from stored heat for a period without the boiler firing. Once there is sufficient water ready to reheat in one long efficient burn, the boiler is started. It also means that boilers can be oversized without any cycling problems.

Rapid Recovery and Smaller Stores:
The original concept of the GX was as a rapid recovery store, with the entire boiler output directed into the top of the store where it can be immediately used for hot water. This means that if a shower is run the boiler will keep up and no stored heat is used up until a second outlet is opened... so it is possible for a 90 litre store to run a bath and a 30 minute shower.

System Design made Easy:
GX Heat Banks can be easily designed online on the DPS web site using our PANEX System Designer. Systems are fully assembled and wired to match the chosen design, tested and supplied ready for a rapid installation.

On-site backup is provided as well as two years guarantee on all components, and ten years on all copper cylinders (twenty on stainless).

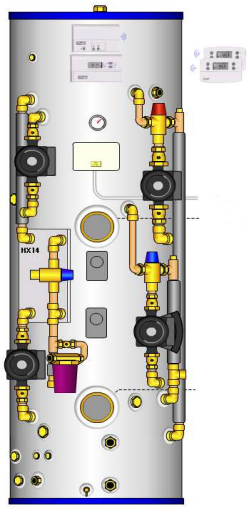

STANDARD SIZES (COPPER)		
CAPACITY	DIAMETER	HEIGHT
90 ltr	480mm	850mm
130 ltr	530mm	1100mm
150 ltr	530mm	1250mm
180 ltr	530mm	1400mm
180 ltr	580mm	1250mm
210 ltr	530mm	1600mm
210 ltr	580mm	1400mm
210 ltr	680mm	1200mm
250 ltr	530mm	1850mm
250 ltr	580mm	1600mm
250 ltr	680mm	1350mm
300 ltr	580mm	1850mm
300 ltr	680mm	1500mm
330 ltr	580mm	2000mm
350 ltr	680mm	1700mm
400 ltr	680mm	1850mm
450 ltr	680mm	2000mm

Rectangular Tanks can be supplied upon request to specified width, depth and height.

Dedicated Pressure Systems Ltd.
17 Manor Green Road, Epsom, Surrey KT19 8RA
Tel. 0845 2411441 Fax. 01372 803678

www.heatweb.com
email: sales@heatweb.com

Heat Bank Design

CXC-150-ABADB-AIBD

- Connects to a Feed and Expansion Tank (max. 10m head).
- 100kW Plate Heat Exchanger can heat 30 ltr/min of mains hot water, up to 6 bar pressure.

KEY:

1 Plate Heat Exchanger, L18-14 (80kW)
2 Flow switch
3 Heat Exchanger Pump
4 Thermostatic mixing valve, RWC Heatguard 22mm
5 Drain off cock
7 White plastic coated steel casing
8 Vent
9 Cold Feed
11 Wiring Centre
13 Boost Immersion Heater
17 Cylinder Thermostat, Immersed [70°C]
28 Danfoss FP715 Two Channel Programmer
30 Danfoss RMT230 Room Thermostat
40 Primary Return Valve, 28mm
44 Heating Pump 5m
53 Y-Pattern Strainer

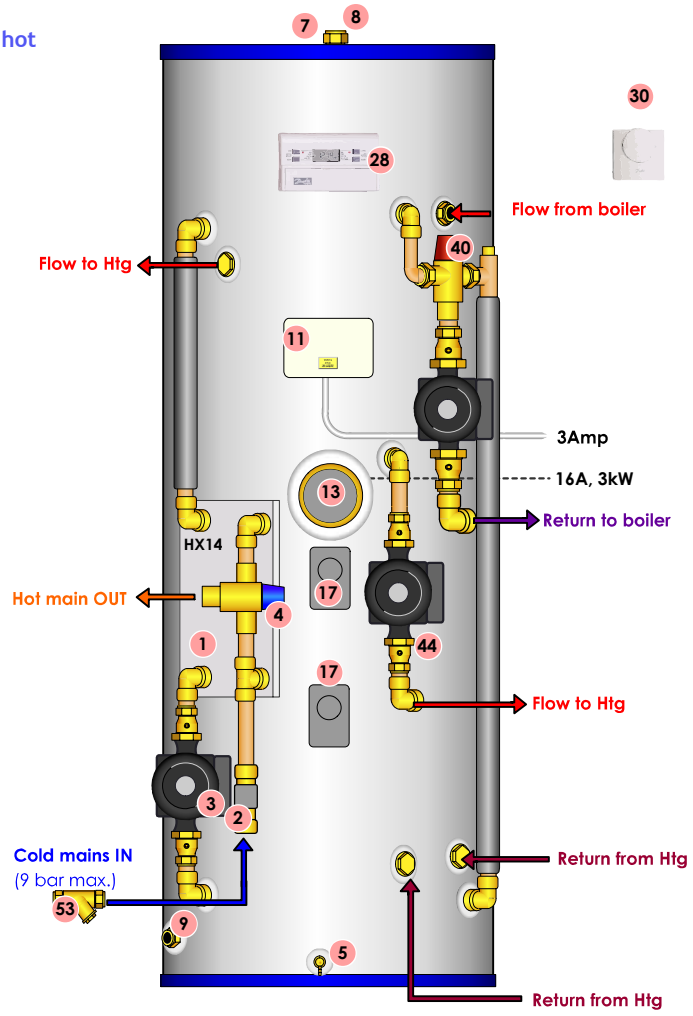

Not to Scale

Wiring Diagram:

CXC-150-ABADB-AIBD

Ensure Earth continuity throughout.

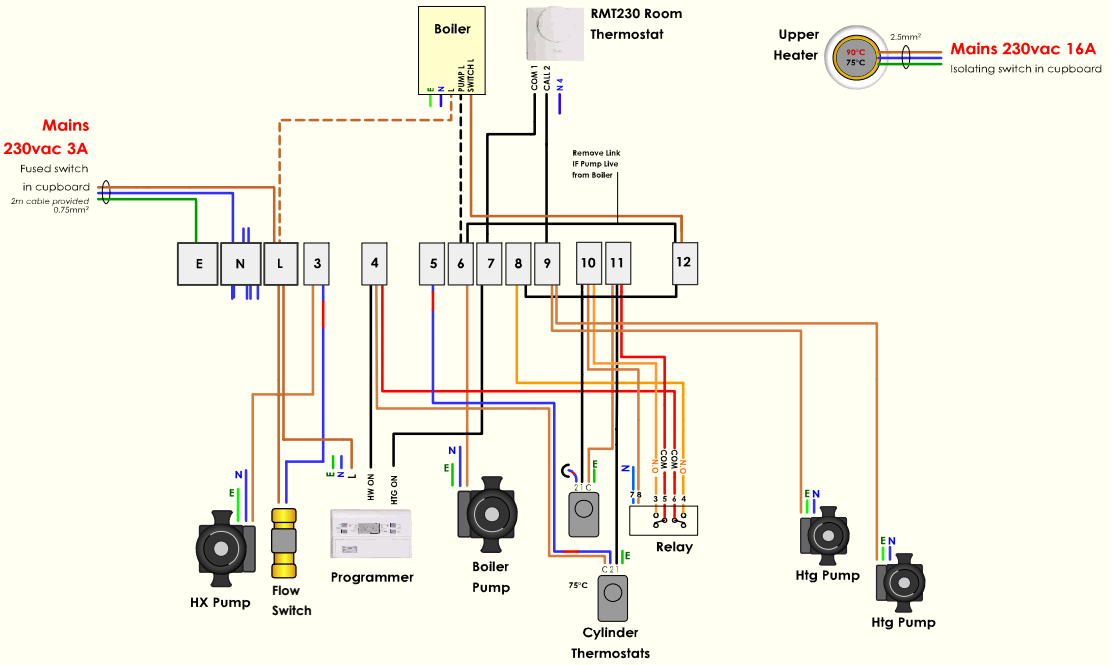

Heat Bank Design

CXC-150-ABADD-BIDZD

- Connects to a Feed and Expansion Tank (max. 10m head).
- 100kW Plate Heat Exchanger can heat 30 ltr/min of mains hot water, up to 6 bar pressure.

KEY:

1 Plate Heat Exchanger, L18-14 (80kW)
2 Flow switch
3 Heat Exchanger Pump
4 Thermostatic mixing valve, RWC Heatguard 22mm
5 Drain off cock
7 White plastic coated steel casing
8 Vent
9 Cold Feed
11 Wiring Centre
13 Boost Immersion Heater
17 Cylinder Thermostat, Immersed [70°C]
28 Danfoss TS715 Programmer (Hot Water)
30 Danfoss TP7000 Programmable Thermostat
32 Flow to Solar Coil
33 Return from Solar Coil
34 Solar Sensor Pocket
40 Primary Return Valve, 28mm
42 Heating Pump 5m
44 Heating Pump 5m
53 Y-Pattern Strainer
55 Solid Fuel / Gravity 1" Connection

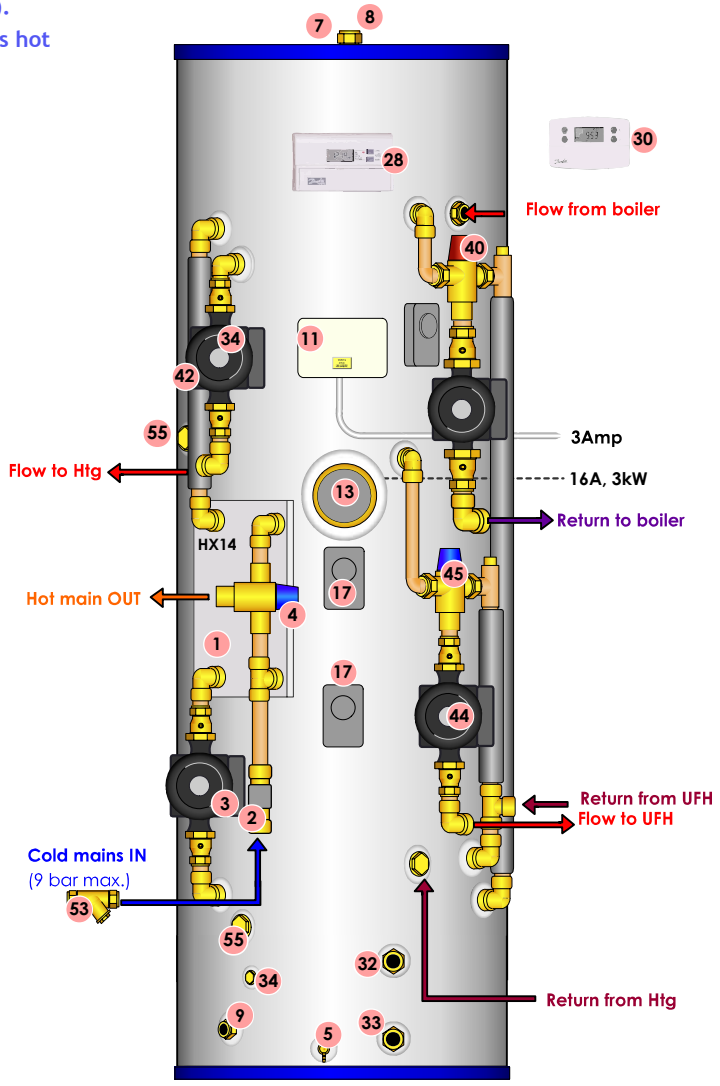

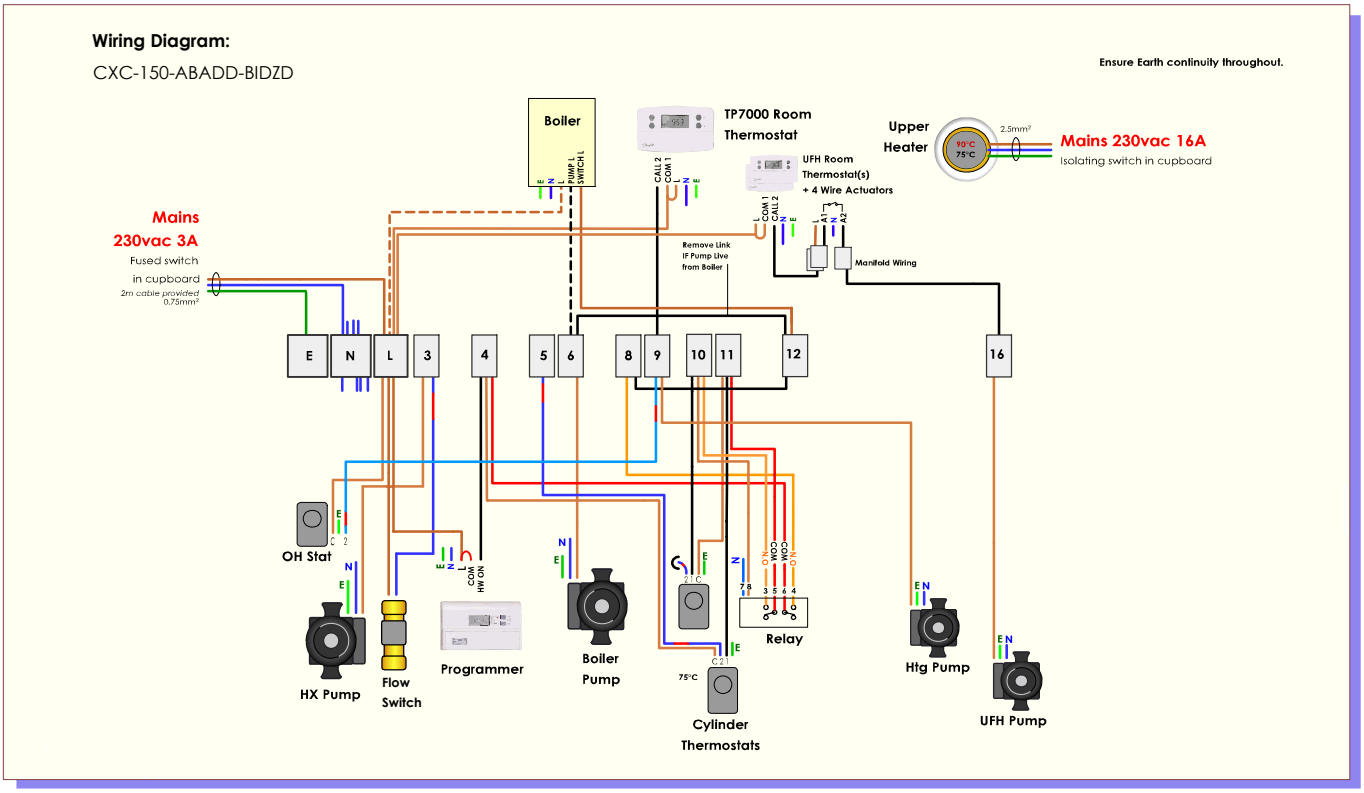

Electric Central Heating: Heat Bank 2000 Range

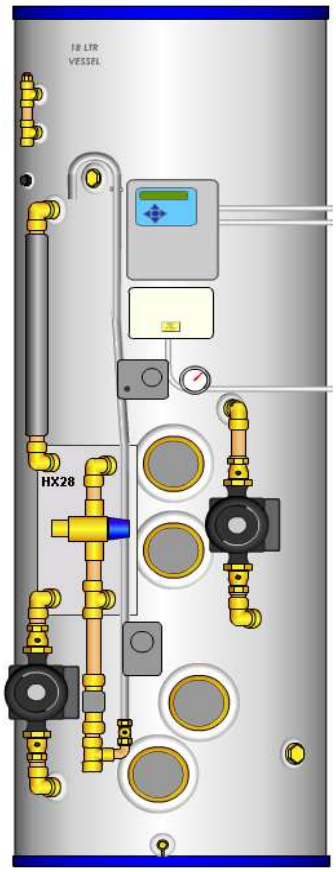

Mains Pressure Hot Water Systems using unpressurised storage for the high performance mains hot water via a plate heat exchanger (PHE). Systems are heated Electrically, and also provide central heating to either radiators or underfloor heating. In addition, there is no annual servicing required, making the range an ideal way to obtaining high pressure hot water, and central heating, without a boiler.

- Mains Pressure Hot Water up to 9 bar.
- Unpressurised system suitable for DIY installation.
- No discharge from store.
- Electrically Heated up to 24kW.
- Solar / Solid Fuel options.
- Ability to run Central Heating from stored water.
- Cased with 40mm Insulation
- Choice of Diameters and Heights.
- Options for additional immersion heaters.
- Cased units available.
- Additional bosses on request.
- Options for fitted control assemblies.
- No Annual Maintenance Requirements.

Plate Heat Exchanger Technology:
Mains pressure hot water is heated through a plate heat exchanger that pulls heat from the stored hot water. The GX itself is unpressurised, overcoming all safety and servicing demands that arise from a pressurised store.

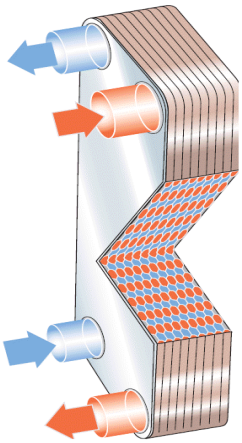

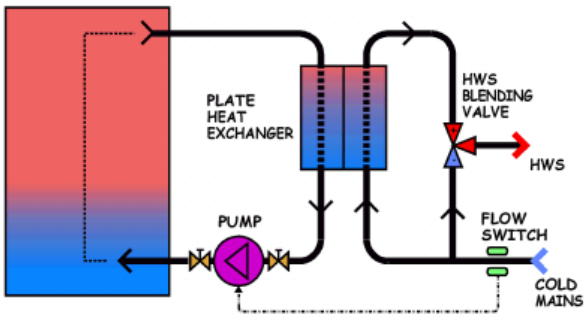

STANDARD OPTIONS	
Xcel Model: Feed and Expansion Tank	
Pandora Model: Manual Fill, No Discharge	
DHW Heat Exchanger	100, 160, 300 kW
Thermostatic DHW Mixer	22, 28mm
Secondary Return Pump (Grundfos)	15-14, 15-50
Sealed System Kit on Heating	
Heating Circuit, Full Store	22, 28mm
Heating Circuit, Lower Store	22, 28mm
Heating Pump Grundfos (Grundfos)	15-60, 25-55, 25-80
Modulating Heating Pump	
Underfloor Heating Valve	22, 28mm
Programmer	One, Two Channel
Programmable Room Thermostat	TP5000, TP7000
RF Radio Communication with Room Thermostat(s)	1, 2, 3 Zone
Immersion Heater	3, 6 kW
Immersion Heater Controller	3, 15kW
Solid Fuel Connections	28mm
Solar Coil	
Sealed System Solar Controls	
Direct Solar or Heat Pump Connections	
Direct Solar Controls	
Overheat Thermostatic Switch (wired to heating)	
Overheat Discharge (mains hot water to drain)	

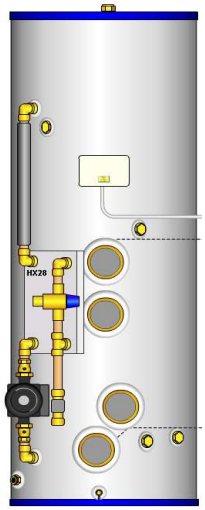

Standard Electric:
The most basic form of HB2000 is the Xcel model, and the best for most applications. The unit connects to a feed and expansion tank (separate) to fill the cylinder and the central heating system. The central heating is pumped directly from the store, with the option for separately fed circuits. Underfloor heating manifold can pull directly from stored hot water.

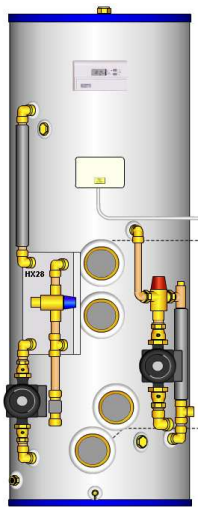

Underfloor Heating Controls:
Electric central heating works best with underfloor heating, and the range includes options for fitted underfloor temperature control and pump. This simplifies the manifold assemblies considerably, and makes it easier to use more than one manifold. The choice of controls varies from basic thermostatic control, up to weather compensation and even C-Bus linked systems.

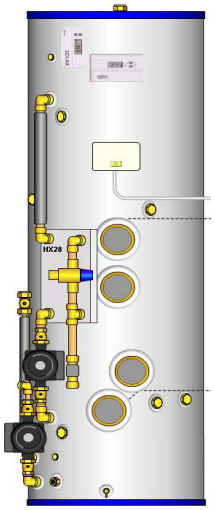

Solar or Solid Fuel Models:
The Heat Bank range can connect to solar panels either directly, or indirectly via a coil. Units can be fitted with a complete solar kit for quick connection to panels. They can also connect to a wood burner or other biomass boiler as an auxiliary heat source. Wood burners are particularly useful to match peak heating demand where electrical power supplies are limited and gas or oil is ruled out.

15kW Immersion Heater Controller:
The MCT50 Immersion Heater Controller provides flexible control of up to 15kW of heaters. These are split into two separate power supplies, 6kW and 9kW, to allow connection to dual meters. Timers for Economy and Boost are provided, as well as the ability to sense supplies coming on. Remote 2-wire boost facility is provided, as well as the ability to use any clock as boost. Overheat and Low Water Protection facilities, and it is possible to sequence immersion heaters from top to bottom.

System Sizing:
Picking the correct size of unit and number of heating elements is affected by the economy tariffs available, the type of meter, and the peak central heating demands. With this information, DPS can help select the best combination and advise how the options will affect electrical load and running costs.

System Design made Easy:
Heat Banks can be easily designed online on the DPS web site using our PANEX System Designer. Systems are fully assembled and wired to match the chosen design, tested and supplied ready for a rapid installation. www.dpsheatweb.com

On-site backup is provided as well as two years guarantee on all components, and ten years on all copper cylinders (twenty on stainless).

STANDARD SIZES - XCEL		
CAPACITY	DIAMETER	HEIGHT
210 ltr	530mm	1600mm
250 ltr	530mm	1850mm
250 ltr	530mm	1600mm
300 ltr	530mm	2000mm
300 ltr	580mm	1850mm
300 ltr	680mm	1500mm
330 ltr	580mm	2000mm
350 ltr	680mm	1700mm
400 ltr	680mm	1850mm
450 ltr	680mm	2000mm
STANDARD SIZES - PANDORA		
CAPACITY	DIAMETER	HEIGHT
210 ltr	530mm	1750mm
250 ltr	530mm	2000mm
250 ltr	580mm	1700mm
300 ltr	580mm	2000mm
300 ltr	680mm	1550mm
350 ltr	680mm	1800mm
415 ltr	680mm	2000mm

Rectangular Tanks can be supplied upon request to specified width, depth and height.

Dedicated Pressure Systems Ltd.
17 Manor Green Road, Epsom, Surrey KT19 8RA
Tel. 01372 803 643 / 675 Fax. 01372 803678

www.heatweb.com
email: sales@heatweb.com

Heat Bank Design

CXC-250-BN63AAA-AAAB

- Connects to a Feed and Expansion Tank (max. 10m head).
- 160kW Plate Heat Exchanger can heat 45 ltr/min of mains hot water, up to 6 bar pressure.

KEY:

1 Plate Heat Exchanger, L18-28 (160kW)
2 Flow switch
3 Heat Exchanger Pump
4 Thermostatic mixing valve, RWC Heatguard 22mm
5 Drain off cock
7 White plastic coated steel casing
8 Vent
9 Cold Feed
11 Wiring Centre
13 Immersion Heater 3kW
14 Economy Immersion Heater
53 Y-Pattern Strainer

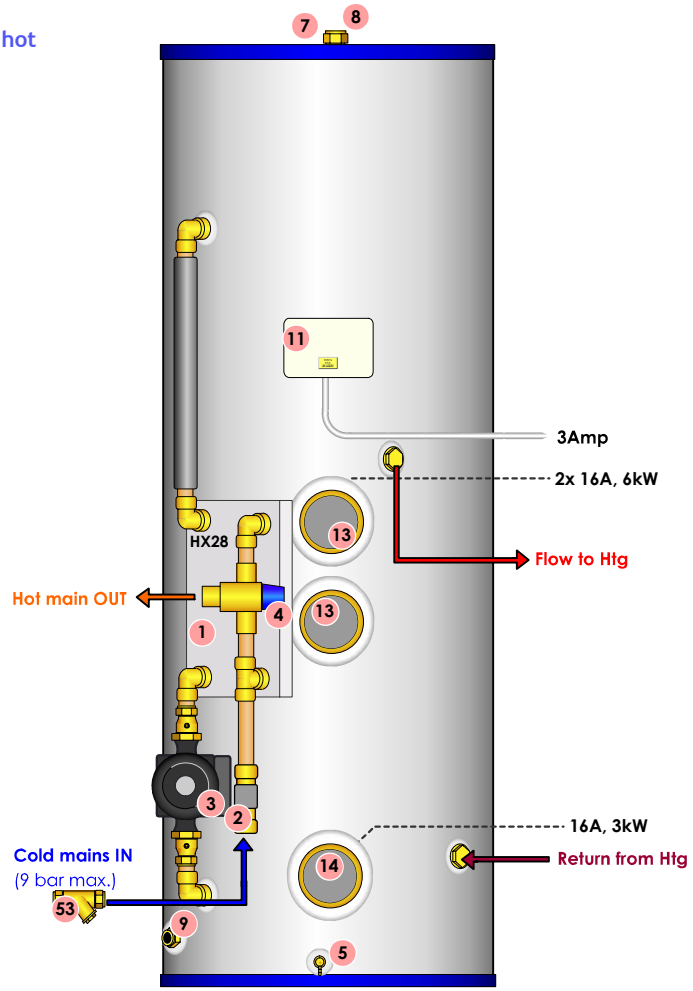

Not to Scale

Wiring Diagram:

CXC-250-BN63AAA-AAAB

Ensure Earth continuity throughout.

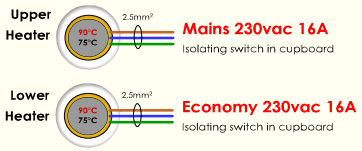

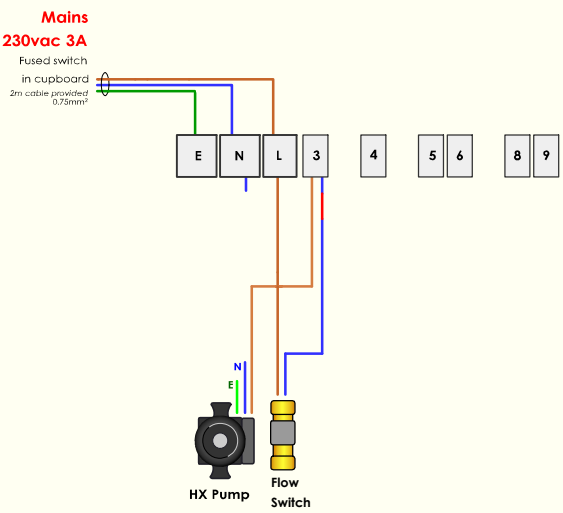

x2

Heat Bank Design

CXC-250-BQ66AAD-AAAD

- Connects to a Feed and Expansion Tank (max. 10m head).
- 160kW Plate Heat Exchanger can heat 45 ltr/min of mains hot water, up to 6 bar pressure.

KEY:

1 Plate Heat Exchanger, L18-28 (160kW)
2 Flow switch
3 Heat Exchanger Pump
4 Thermostatic mixing valve, RWC Heatguard 22mm
5 Drain off cock
7 White plastic coated steel casing
8 Vent
9 Cold Feed
11 Wiring Centre
12 Water Level Sensor
13 Immersion Heater 3kW
30 Danfoss TP7000 Programmable Thermostat
44 Heating Pump 5m
49 Heater Control Stat + Overheat Stat
50 Lower Heater Control Stat
51 Immersion Heater Controller Plus
53 Y-Pattern Strainer

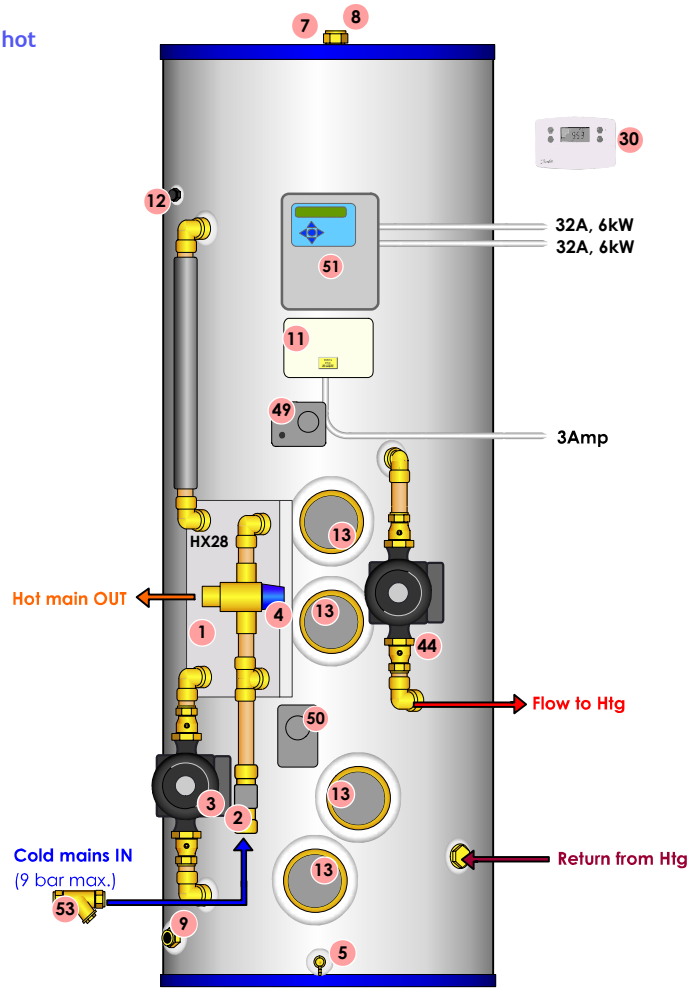

Not to Scale

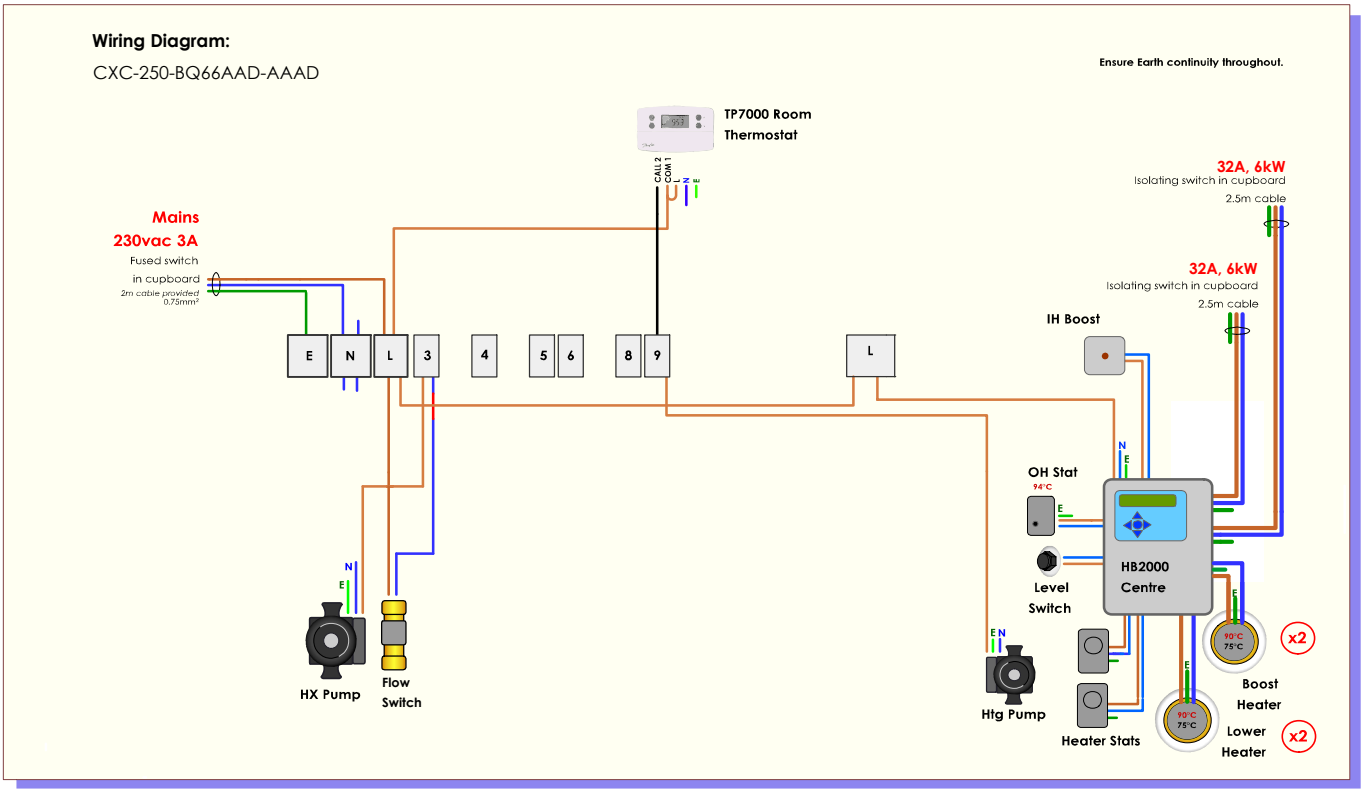

Heat Bank Design

CXC-250-BQ96AAD-LABQ

- Connects to a Feed and Expansion Tank (max. 10m head).
- 160kW Plate Heat Exchanger can heat 45 ltr/min of mains hot water, up to 6 bar pressure.

KEY:

1 Plate Heat Exchanger, L18-28 (160kW)
2 Flow switch
3 Heat Exchanger Pump
4 Thermostatic mixing valve, RWC Heatguard 22mm
5 Drain off cock
7 White plastic coated steel casing
8 Vent
9 Cold Feed
11 Wiring Centre
12 Water Level Sensor
13 Immersion Heater 3kW
14 Immersion Heater 6kW
30 Danfoss TP7000 Programmable Thermostat
32 Flow to Solar Coil
33 Return from Solar Coil
34 Solar Sensor Pocket
44 Heating Pump 6m
49 Heater Control Stat + Overheat Stat
50 Lower Heater Control Stat
51 Immersion Heater Controller Plus
53 Y-Pattern Strainer

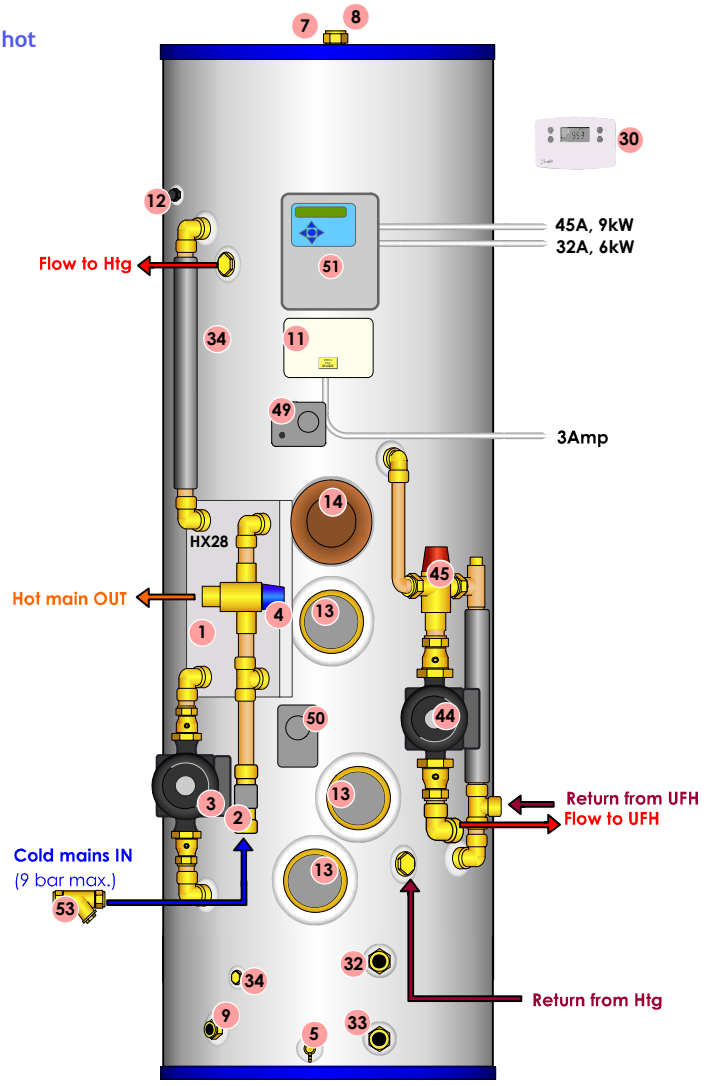

Not to Scale

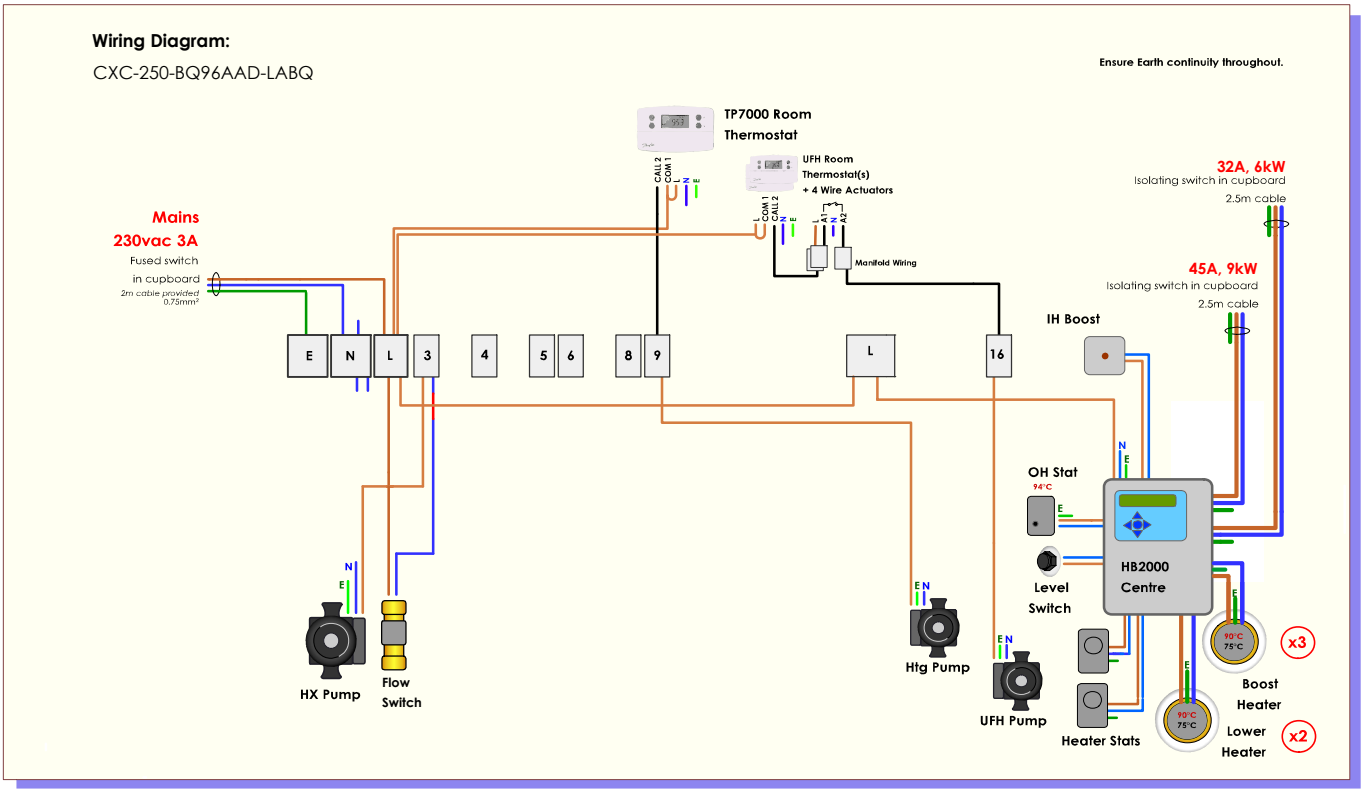

15kW Immersion Heater Controller: MCT50

For systems requiring more than the usual 3 to 6kW of elements, typically for driving hot water and central heating, the MCT50 covers every possible immersion heater wiring configuration we have encountered in 20 years.

- Controls up to five 3kW immersion heaters.
- Suitable for single or dual supplies.
- Staggered firing of heating elements.
- Fuses for each heater built in.
- Ability to split storage into 1,2 or 3 zones.
- Ability to sequence between zones.
- Ability to sense an externally switched power supply.
- Option economy timers (3 on/offs).
- Boost timer.
- Menu driven setup, with hidden engineers' menu.
- Hard wired power relays.
- Large rising clamp cable terminals.
- Ability to chain units together for up to 45kW.

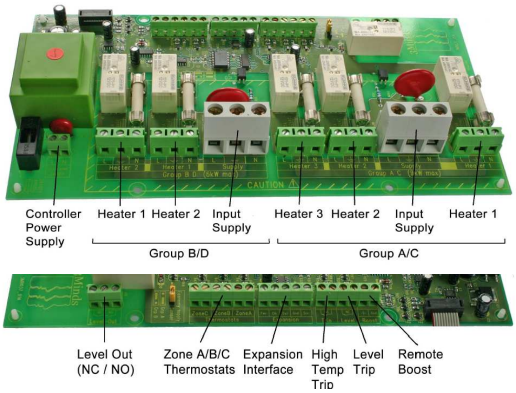

The versatility of the MCT50 allows electrical tariffs or meter arrangements to be changed on site without rewiring the heating controls to suit. It has been designed for reliability and ease to service, and overcomes a great deal of site labour when fitted to a Heat Bank and pre-wired.

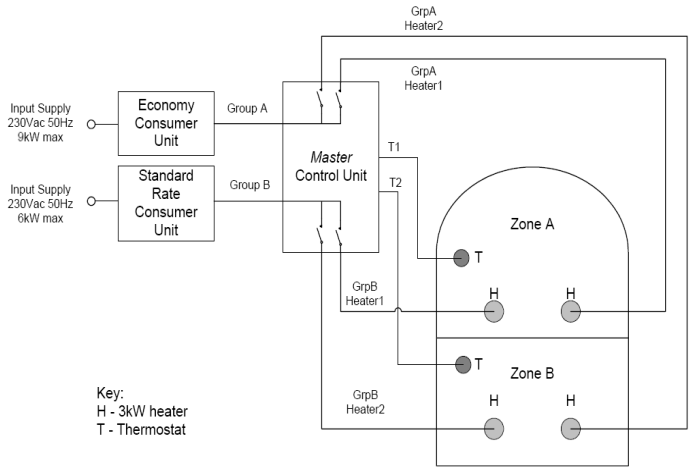

Remote Boost:
The MCT50 comes with a 2-wire boost button to bring on elements for 1 hour when pressed. The button flashes on overheat or low water level trip. Alternatively one can use any switch of timer for boost control.

SPECIFICATION	
Purpose of control	Sensing control
Classification	Type 1.B Action, micro-disconnection on operation
Heaters Contact rating	230VAC Suitable for heating elements up to 3kW
Level Sensor Output	230VAC 3A resistive / 3A inductive
Control power supply	230V AC 50Hz 4W
Load power supply	230V AC 50Hz 3 x 3kW, 9kW max and 2 x 3kW, 6kW max
Boost duration	30, 60 and 120 min, timed
Remote Boost duration	60 min
Operating temperature range	0°C to 40°C
Control pollution situation	Pollution degree 2
Shock protection	Class II
Rated impulse voltage	4000V
Ball pressure test	75°C
Enclosure protection	IP30
Contacts	Micro-disconnection
Case material	Flame retardant high impact Polystyrene (HIPS)
Weight	Master 1.2 kg; Slave 1.0kg
Overall Dimensions	Width 220mm (including cable glands) Height 254mm Depth 63mm
Mounting	Surface mounting

Dedicated Pressure Systems Ltd.
17 Manor Green Road, Epsom, Surrey KT19 8RA
Tel. 0845 2411441 Fax. 01372 803678

www.heatweb.com
email: sales@heatweb.com

Want a renovating fairytale? Call in the specialists …

When you have a characterful older property, the challenge is to bring it up to the twenty-first century without losing any of its traditional charm. And when Michael Axler renovated his Edwardian home, he decided not only to modernise but to prepare for the future.

"Our home is rather unusual," Michael explains, *"in that it's part of a very large Edwardian manor which has been divided into separate apartments. But at the same time, it's a very normal scenario – before we renovated, we had a conventional boiler, antiquated pipes and poor water pressure which we had to boost with two rather noisy pumps. Our ideal heating system would be multi-fuel, so that it could be connected to our solar panels and wood burner as well as to our gas supply, and one which was flexible enough to be adaptable to our future requirements. We also hoped to find a system that would dispense with the lengthy and antiquated pipework in the property, as well as improving our water pressure."*

This may seem like a lot to ask, but the Axlers weren't disappointed. *"Well,"* Michael says, *"we found everything we were looking for in the DPS Heatbank. We've connected it to our solar panels and our wood burning stove and removed those unsightly pipes – although we were able to leave some of the original radiators as period features. Now it's much neater, with everything in one place. And we have control over the heat we use: if we want to use more energy from the wood burner or our solar panels, we just adjust it accordingly. In fact, now we tend to only use the gas supply for 'backup', so we've definitely saved a lot of money on energy bills."*

In fact, the DPS Heatbank brought even more advantages than they'd hoped for. *"For one thing,"* Michael says, *"our water pressure is now so good we've dispensed with the pumps entirely, which is a huge benefit as they were just so noisy and quite unreliable. Unlike the DPS Heatbank, which comes with a twenty five year warranty on the store itself, so I have complete peace of mind. And now, when I take a shower, I know the water isn't from a tank where it's been stored for ages, but is arriving freshly heated from the mains supply. The other benefit is that hard water isn't a problem any more. When we removed the old pipes, they were almost completely furred up on the inside with limescale: in a one and a half inch pipe, only a quarter of an inch remained unblocked. It's good to know that hard water won't be a problem any more: the DPS Heatbank itself is a closed system so isn't affected by limescale build up, and we had it fitted with a water softener so that all our pipes and appliances are protected too."*

It may seem like a renovating fairytale, but the project had its teething problems. Michael explains, *"when we first decided to overhaul our heating and hot water, we asked the company responsible for installing our wood burning stove to install a new system. Unfortunately, they installed completely the wrong type of tank in the wrong location with the wrong connections. Luckily, when we called in our plumber to try to undo some of the damage, he suggested we speak to industry experts DPS, who were excellent. It just showed us how important it is to have people who know what they are doing: it takes a lot of planning and experience to understand what's needed for each particular situation. DPS have decades of experience and are relatively rare in that they understand all aspects of the systems, from the different energy sources to the electrics. They came out to oversee the installation of the DPS Heatbank twice and were simply excellent."*

So, the question is, would he recommend DPS and the DPS Heatbank? *"Definitely,"* he says, *"I would recommend both DPS and the DPS Heatbank without hesitation."* **So, if you're looking for a multi-fuel, reliable heating and hot water system designed and manufactured by industry experts, it seems the DPS Heatbank is one way to get your renovating happy ending!**

DPS Commentary:

We were called in to have a look at Mr.Axlers property by Nick Manual of Griffon House. Nick has described the job as 'very interesting' and he was not wrong. On our first site visit we were shown around the property, including two existing wood burners and a large solar array. One of the wood burners had been plumbed up dangerously using plastic fittings and no vent pipe, the solar system did not work, and in the basement boiler room we saw three types of storage unit from previous attempts to get the system working. In addition to this one of the existing gas boilers had blown apart due to a lack of expansion vessel and safety relief, and the pipework was a mess.

Mr. Axlers also wanted another multifuel stove and a 40kW gas boiler to be added into the system, along with simple controls that allowed summer/winter modes to be used, where the gas boiler can be brought into backup the wood burners and solar if demand so required.

We agreed on a suitable location for the new Heat Bank and went over the possible pipework layout with Nick, as well as how best to integrate the solar, wood and gas and ensure the entire system is protected against overheat (even during power cuts or with pump failures).

The system was quoted, ordered by the customer, and supplied to site within a week. The following week we attended a site meeting to finalise a few minor installation points, and go over the system with the customer.

British Standard Foamed Copper Cylinders

BS 1566 : 2002

The full range of insulated copper hot water cylinders including all standard sizes, as well as custom models made to requirements.

- Copper Grades 1, 2 or 3 (25m, 15m, 10m head)
- Many models available in Stainless Steel.
- Foam Insulation up to 80mm
- Choice of Diameters and Heights
- Choice of Coils for indirect heating.
- Solar and Solid Fuel options.
- Options for fitted immersion heaters.
- Cased units available.
- Additional bosses on request.
- Options for fitted control assemblies.

The table below provides information on the standard sizes, as well as the standard specifications for coils and material thicknesses.

Special sizes and additional bosses on request.

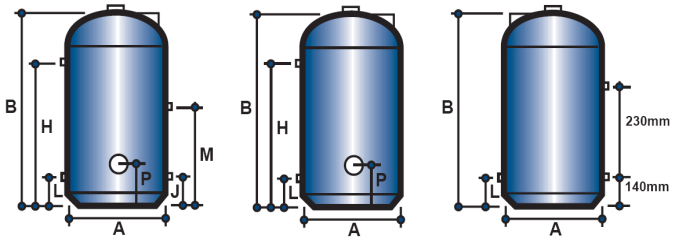

Type Reference	External Diameter	Minimum Height	Nominal Storage Capacity	Minimum Heating Area for type G cylinders	Minimum Nominal Thickness of Copper						Size of Primary Heater	Preferred Height of Connections Above Datum					Preferred Size of Secondary Connections	Preferred Size of Primary Connections
					Grade 1		Grade 2		Grade 3									
					Test Pressure 3.65 bar		Test Pressure 2.20 bar		Test Pressure 1.45 bar									
					Max Working Head 25m		Max Working Head 15m		Max Working Head 10m									
					Concave Bottom	Rest of Shell	Concave Bottom	Rest of Shell	Concave Bottom	Rest of Shell		Secondary Return	Primary Return	Cold Feed	Primary Flow	Immersion Heater Boss	Internal (Female)	External (Male)
	A	B										H	J	L	M	P		
	mm	mm	L	m²	mm	mm	mm	mm	mm	mm	mm	mm	mm	mm	mm	mm		
0	300	1600	96	0.42	1.6	1.2	1.6	0.9	1.6	0.7	22	1250	100	100	540	150	G1	G1B
1	350	900	72	0.32	1.6	1.2	1.6	0.9	1.6	0.7	22	700	100	100	400	150	G1	G1B
2	400	900	96	0.42	1.8	1.2	1.6	0.9	1.6	0.7	28	700	100	100	400	150	G1	G1B
3	400	1050	114	0.50	1.8	1.2	1.6	0.9	1.6	0.7	28	800	100	100	470	150	G1	G1B
4	450	675	84	0.37	2.0	1.6	1.6	1.0	1.6	0.7	28	450	100	100	300	150	G1	G1B
5	450	750	95	0.48	2.0	1.6	1.6	1.0	1.6	0.7	28	550	100	100	340	150	G1	G1B
6	450	825	106	0.53	2.0	1.6	1.6	1.0	1.6	0.7	28	625	100	100	370	150	G1	G1B
7	450	900	117	0.61	2.0	1.6	1.6	1.0	1.6	0.7	28	700	100	100	400	150	G1	G1B
8	450	1050	140	0.70	2.0	1.6	1.6	1.0	1.6	0.7	28	800	100	100	470	150	G1¼	G1B
9	450	1200	162	0.88	2.0	1.6	1.6	1.0	1.6	0.7	28	950	100	100	540	150	G1¼	G1B
9E	450	1500	206	0.90	2.0	1.6	1.6	1.0	1.6	0.7	28	1200	100	100	620	150	G1¼	G1B
10	500	1200	190	1.05	2.5	1.8	1.8	1.2	1.6	0.9	35	950	150	150	540	200	G1½	G1¼B
11	500	1500	245	0.87	2.5	1.8	1.8	1.2	1.6	0.9	35	1200	150	150	670	200	G1½	G1¼B
12	600	1200	280	1.32	2.8	2.0	2.5	1.4	2.0	1.2	35	950	150	150	540	200	G2	G1½B
13	600	1500	360	1.68	2.8	2.0	2.5	1.4	2.0	1.2	35	1200	150	150	670	200	G2	G1½B
14	600	1800	440	2.04	2.8	2.0	2.5	1.4	2.0	1.2	35	1350	150	150	800	200	G2	G1½B

Dedicated Pressure Systems Ltd.
17 Manor Green Road, Epsom, Surrey KT19 8RA
Tel. 0845 2411441 Fax. 01372 803678

www.heatweb.com
email: sales@heatweb.com

Budget Mains Fed Thermal Storage Systems

The low cost approach to providing mains pressure hot water, using standard insulated copper hot water cylinders in conjunction with the patented DPS Hi-Flow conversion unit.

- Very Low Capital Costs
- Full Mains Pressure Hot Water
- Huge Range of Cylinder Sizes
- Foam Insulation up to 80mm
- Choice of Diameters and Heights
- Choice of Coils for indirect heating.
- Solar and Solid Fuel options.
- Additional bosses on request.

Patented DPS Hi-Flow Mains Conversion Unit

+

British Standard Grade 3 Copper Cylinder

Within the Hi-Flow are all the components required to generate mains pressure hot water up to 9 bar. The Hi-Flow uses a Plate Heat Exchanger to transfer thermal energy from the stored water to heat mains water, and a pump to circulate water from the cylinder through the heat exchanger and back. A thermostatic mixing valve controls the temperature of hot water delivered to taps. The unit is 375mm x 375mm x 175mm and can be easily wall mounted.

The Hi-Flow can connect to any hot water cylinder, including low-cost British Standard cylinders, making it far easier to source the correct size store to fit into a given location. The table to the right shows just some of the standard cylinder sizes available.

Type Reference	External Diameter A	Minimum Height B	Nominal Storage Capacity
	mm	mm	L
0	300	1600	96
1	350	900	72
2	400	900	96
3	400	1050	114
4	450	675	84
5	450	750	95
6	450	825	106
7	450	900	117
8	450	1050	140
9	450	1200	162
9E	450	1500	206
10	500	1200	190
11	500	1500	245
12	600	1200	280
13	600	1500	360
14	600	1800	440

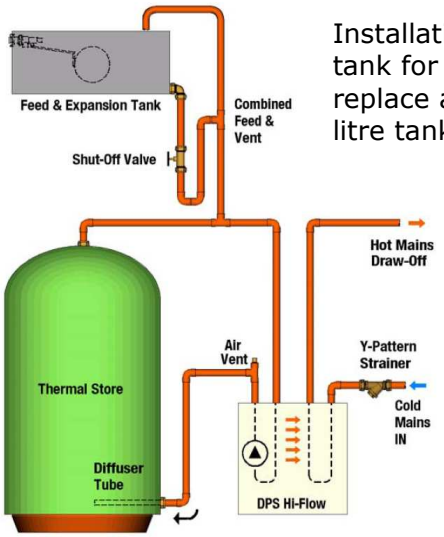

Installation also requires connection to a feed tank for initial filling of the cylinder, and to replace any evaporation losses. A standard 16 litre tank usually suffices.

Budget Foam Lagged Heat Banks

Alternatively, the budget range of Heat Bank Systems provides our lowest cost, fully assembled mains-fed stores. Available in basic electric or indirect, as well as solar, solid-fuel options, with insulation to specified thickness.

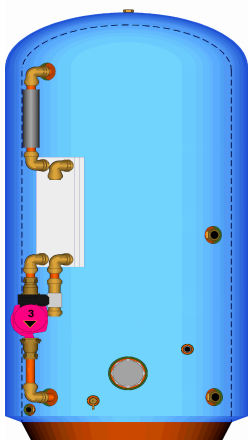

Dedicated Pressure Systems Ltd.
17 Manor Green Road, Epsom, Surrey KT19 8RA
Tel. 0845 2411441 Fax. 01372 803678

www.heatweb.com
email: sales@heatweb.com

DPS Hi-Flow Mains Conversion Kit

Mains Pressure Hot Water Systems using vented storage for the high performance mains hot water via a plate heat exchanger (PHE). The simplest way to provide mains hot water from a standard vented cylinder. Easy to retro-fit, there is no annual servicing required, and the cost is a fraction of other mains systems.

- Mains Pressure Hot Water up to 9 bar.
- Suitable for DIY installation.
- Connects to any type of hot water cylinder.
- Easy to Install.
- Instantaneous Hot Water.
- No Annual Maintenance Requirements.

The Hi-Flow converts a cylinder into a thermal store, adding the benefits of mains pressure hot water while keeping the existing vented hot water storage. The existing cold water storage tank can be left in place to act as the feed and expansion for the cylinder, or can be replaced with a much smaller tank.

Plate Heat Exchanger Technology:
Mains pressure hot water is heated through a plate heat exchanger that pulls heat from the stored hot water. The cylinder remains unpressurised, overcoming all safety and servicing demands that arise from a pressurised store.

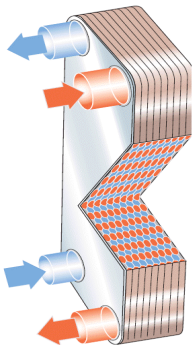

Greater Flexibility on Sizing:
The ability to convert any cylinder to provide mains hot water opens up possibilities where space is a problem. Unvented cylinders and other mains water systems usually come in standard sizes, which may not be the best suited to a particular application. Instead one can use a British Standard Copper Cylinder, easily made in one-offs to specified diameter and height, and connect a Hi-Flow remotely. When there is a real squeeze on space, the Hi-Flow can connect to a rectangular tank made to fit exactly into a specified void.

Existing System Conversion:
The diagram opposite shows how the Hi-Flow can be added to an existing system with minimal pipework alterations. The cylinder itself does not need to be touched. The cold feed and hot draw off are cut into and taken to the Hi-Flow. The cold feed connection from the cold tank is fed back into the vent to create a combined feed and vent. The cold mains is connected to the Hi-Flow, and the hot mains out to the existing hot feed to taps.

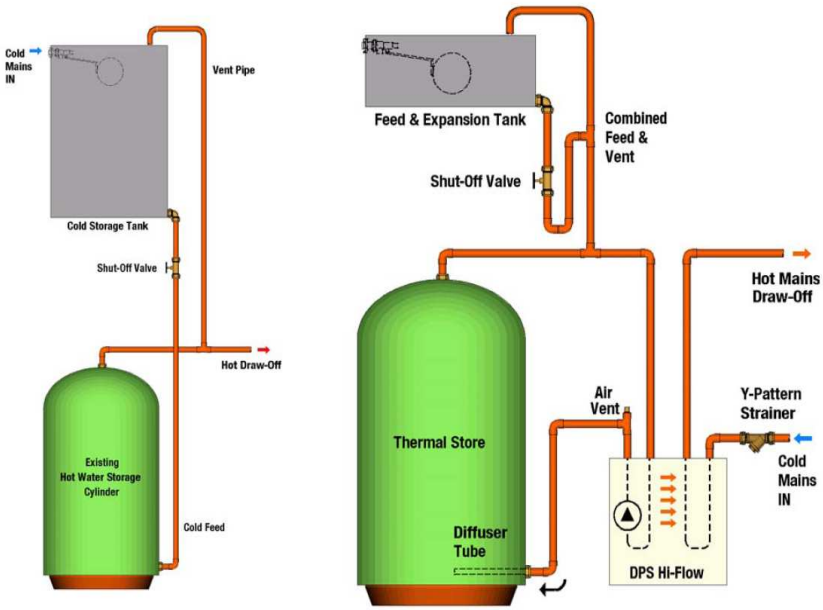

STANDARD SPECIFICATIONS	
DHW Plate Heat Exchanger	100 kW
Thermostatic DHW Mixer	22mm
Width	350mm
Height	375mm
Depth	175mm

BoilerMaster PHE Heat Exchanger Systems

Designed to run in conjunction with central boiler applications, the BoilerMaster range uses plate heat exchanger technology to provide instantaneous mains pressure hot water with central heating options.

- Mains Pressure Hot Water up to 9 bar.
- Instantaneous Hot Water.
- No Hot Water Storage.
- Suitable for DIY installation.
- No Discharge Requirements for Hot Water.
- Takes up less room than other systems.
- Standard and Custom Built Models
- Fit and Forget Design.
- No Annual Maintenance Requirements.
- Options for Sealed Central Heating.
- All mechanical models available (no power).
- Options for Energy Metering.
- Options for C-Bus Communication.

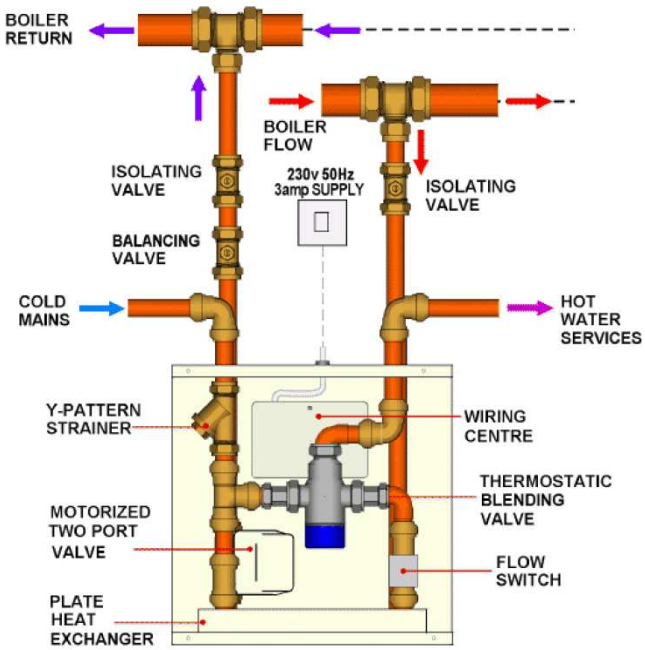

Unlimited Options:
In its basic form, the BoilerMaster is fitted with a motorised valve that opens when a hot taps is started. This allows hot primary water to flow through the heat exchanger, in turn heating up the mains water which is mixed to a preset temperature. The additional options can provide for any combination of control valves a system designer specifies, along with any controls and metering that is needed.

Complete Systems:
Both hot water and central heating can be provided from a single pre-fabricated unit, ready for rapid installation.

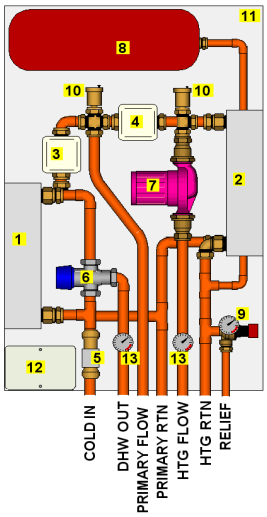

Consultancy:
DPS has a great deal of experience with a wide variety of systems and we provide free consultancy to all our customers.

STANDARD OPTIONS	
DHW Plate Heat Exchanger	100, 160 kW
Central Heating Heat Exchanger	10, 18 kW
Thermostatic DHW Mixer	22, 28mm
Primary Motorised Valves (HW/HTG)	22, 28mm
Thermo-mechanical Primary Valves	22, 28mm
Modulating 0-10v Primary Valves	22, 28mm
Primary Differential Pressure Control	
Primary Shunt Pump	15-60
Heating Pump	15-60
Modulating Heating Pump	Alpha, UPE
Sealed System Kit on Central Heating	
Underfloor Heating Valve	22, 28mm
Modulating 0-10v UFH Valve for weather compensation	22, 28mm
Programmer	One, Two Channel
Programmable Room Thermostat	TP5000, TP7000
RF Radio Communication with Room Thermostat(s)	1, 2, 3 Zone
Heat Metering	
C-BUS Communication and Control	

Dedicated Pressure Systems Ltd.
17 Manor Green Road, Epsom, Surrey KT19 8RA
Tel. 01372 803 643 / 675 Fax. 01372 803678

www.heatweb.com
email: sales@heatweb.com

Communal Heating System (17931) for 6-10 Flats

A turn-key solution to the provision of domestic hot water and central heating in communal properties. Modular design using domestic boilers and storage, combined with commercial controls and monitoring facilities, makes this a very robust and cost effective solution.

Benefits to User:
- Central heating
- Instantaneous mains pressure hot water up to 6 bar, 30 lpm
- No gas appliances or pressurised cylinders to maintain

Benefits to Landlord:
- Off-site reading of individual energy usage for billing
- Off-site monitoring and control of all plant
- Automatic forwarding of alarms (e.g. to a mobile)
- Software required for monitoring provided FREE
- NO license fees or ongoing charges

Features of Plant:
- Redundancy on Boiler, Pumps, and Storage
- Twin 37kW Condensing Boilers (74kW peak)
- Boiler sequence controller
- Twin 300 litre Buffer Stores (600 litres total)
- Duplex (Duty/Standby) Modulating Primary Pump
- Up to 230 lpm (14m3/h) primary circulation
- Automatic pump changeover
- Low system pressure alarm
- All controls C-BUS linked to central modem.
- Modular and easy to upgrade.

DPS BoilerMaster
Plate Heat Exchange Technology:
Mains pressure hot water is heated locally within each flat through a plate heat exchanger at up to 30 litres per minute, and 6 bar pressure, without Legionella risks. Also provides central heating control and metering of energy used for billing purposes.

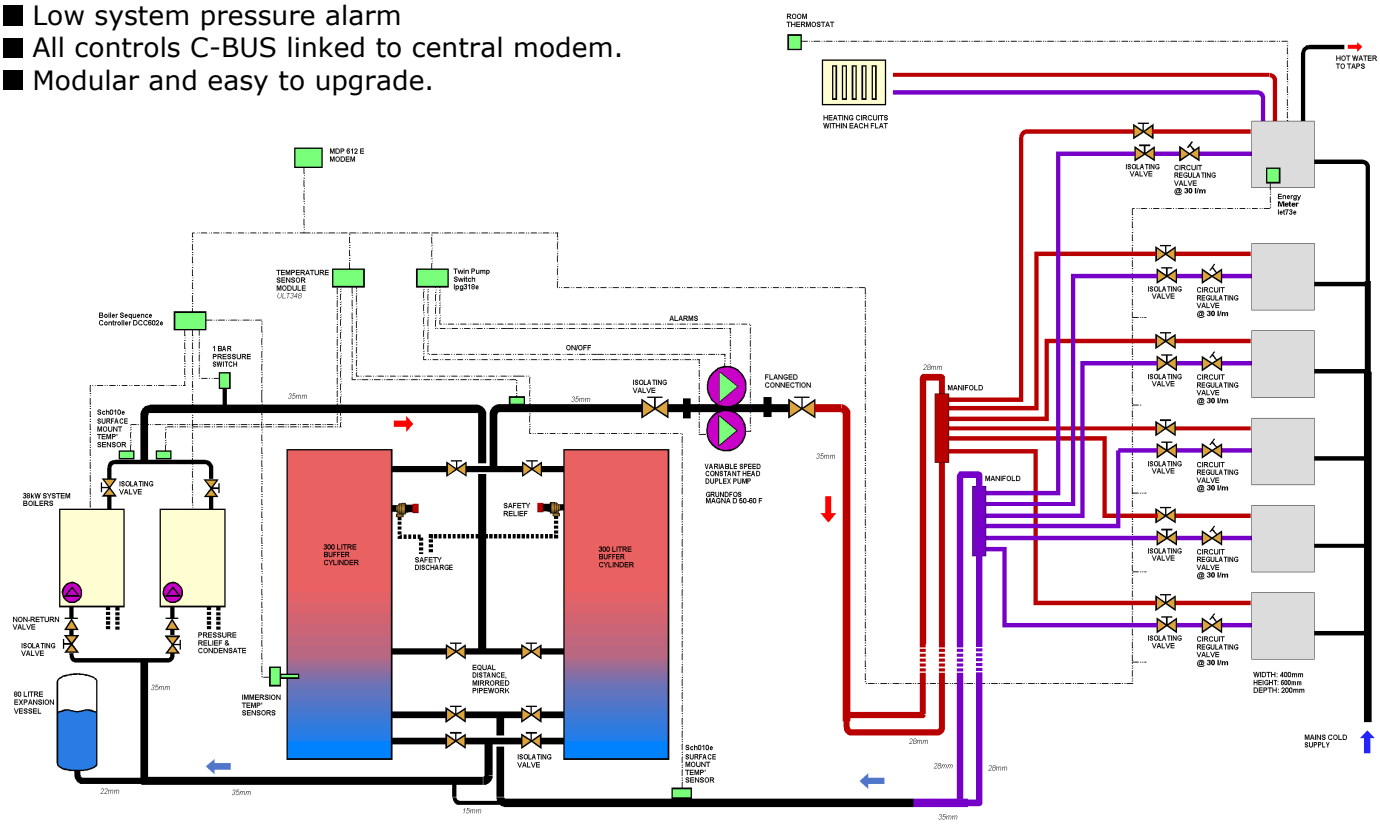

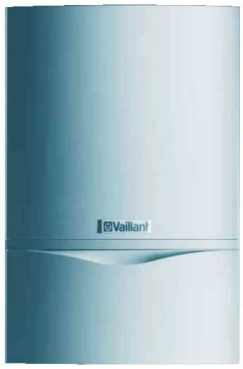

2 x Vaillant 37kW EcoTEC Plus Condensing System Boilers:
Together providing up to 74kW of energy input, the boilers have been selected for efficiency, quality, and after sales backup.

2 x Stainless Steel Buffer Stores:
As standard providing 600 litres of primary storage. Selection of sizes available to match space available. Options for electric backup and input from renewable sources.

Grundfos Duplex Magna 32-100 Variable Speed Pump:
Provides duty / standby operation that adjusts output to match demand. The pumps. Each head can supply up to 200 lpm at a head of 0.7 bar.

6 x BoilerMaster District Interface Units:
Provides 100kW mains pressure hot water within flats, as well as central heating control, and primary metering. Connects on C-BUS to plant room.

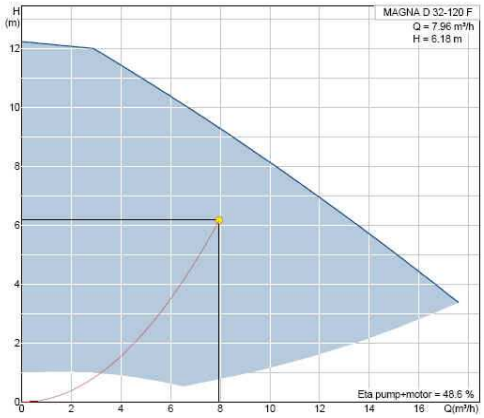

< Pump Graph

and

BoilerMaster Schematic >

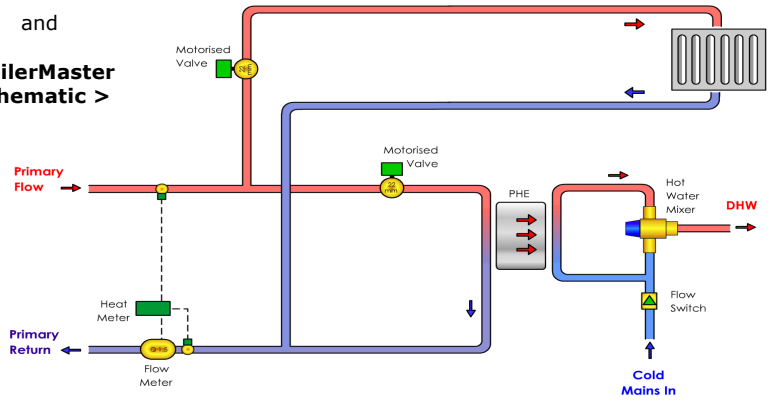

Boiler Sequence Controller:
Manages the firing of the two boilers to match demand. Also includes timing function, as well as boiler lockout alarm, and control over set point temperatures.

Temperature Module:
Provides access to information from four temperature sensors, for boiler flow temperatures, as well as distributed primary flow and return temperatures.

Pump Changeover Module:
Provides duty / standby control over pump, with pump overload alarm. Automatically alternates the operation of pumps.

Energy Meter Module:
Fitted within each BoilerMaster the unit stores the energy used by each flat for billing purposes. Also records two auxiliary inputs for gas, electricity or water.

Modem Module:
Connects all the C-BUS modules to a telephone line to allow off-site monitoring and control, as well as access to billing information. GSM modem optional.

The software required to access the Coster modules remotely is provided free of charge, as is technical backup. Combined with the huge range of other modules available, you can be confident in connecting all possible plant equipment to the same remotely managed system, without hidden operating costs.

Dedicated Pressure Systems Ltd.
17 Manor Green Road, Epsom, Surrey KT19 8RA
Tel. 0845 2411441 Fax. 01372 803678

www.heatweb.com
email: sales@heatweb.com

Solar Electric Xcel Heat Bank Pack

An Advanced Heat Bank thermal store, capable of providing electric central heating and mains pressure hot water, complete with solar panels, header tank, and all controls factory fitted and wired to store. Just add pipework for a totally renewable, maintenance free solution.

- Mains Pressure Hot Water up to 9 bar.
- Fully Vented System.
- Solar and Electric Ready.
- Options for Solid Fuel and Heat Pumps.
- Fully Pre-Fabricated for quick reliable installation.
- No Annual Maintenance Requirements.
- Glycol Free, Maintenance Free, Solar Operation.

The Full Kit:

The Solar Panels included in the pack have been carefully selected for the best balance of performance, reliability, appearance and price.
The Feed and Expansion Tank is fully assembled and insulated, further saving installation time.

Open Vented for connection to Feed and Expansion Tank for automatic maintenance-free filling of both store, heating system and solar panels.

Solar Controller provides the necessary control of the solar pump to transfer heat from panels to the store. Various models available.

Spare connections (flow and return) for feeding a radiator circuit, towel rail circuit, or a heat dump for solar excess input.

Immersion Heaters are controlled using cylinder thermostats that allow users to adjust the storage temperature in the top and bottom half of the store separately.

Plate heat exchanger provides mains pressure hot water up to 9bar and 40 litres per minute, without any service requirements.

Hot water temperature is controlled using a standard Heatguard Thermostatic Mixing Valve, for reliable operation, and easy to service.

The solar pump is fitted and wired to the solar controller. A standard 5m pump is fitted as standard, with options for a low voltage DC pump that can be driven directly from a PV solar panel.

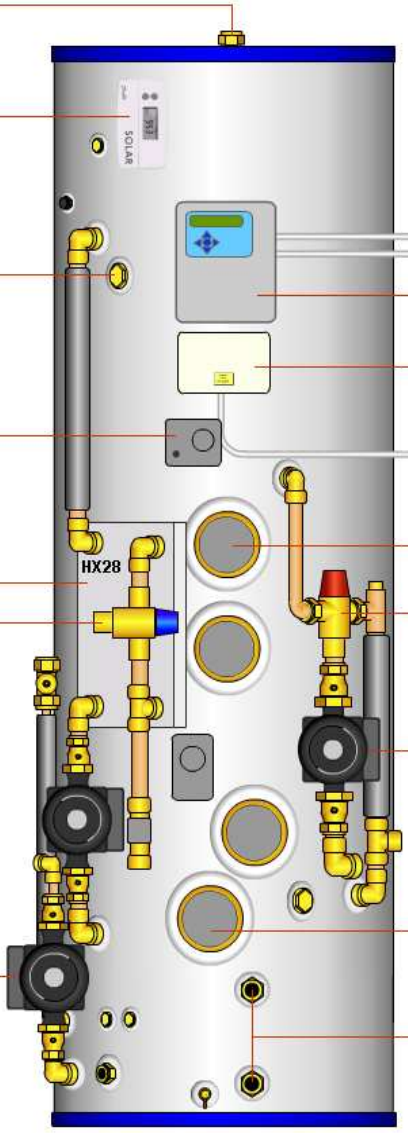

Central heating controls can be supplied, with options from standard mechanical room thermostats up to full RF radio multi-zone control of UFH.

The system is designed to run hot water and heating using only electricity. To make simple connection to virtually any supply arrangement or tariff, the unit may be fitted with a 15kW Immersion Controller, pre-wired to elements and providing both economy and boost control.

All central heating and hot water controls run from a separately fused 3A mains supply, and are pre-wired to a fitted wiring centre.

The unit is fitted with a combination of 3kW and 6kW heating elements to meet the required power input.

Solar and Electric systems run particularly well with underfloor heating, and it is an option for the store to come with a standard underfloor control set providing a low temperature pumped flow that can be fed to one or more basic manifolds.

Heating elements in the lower half of the store can be timed or switched separately to those in the upper half.

Where electricity is used to drive heating it is often desired to connect a heat pump to reduce running costs, and connections are provided for this.

Plate Heat Exchanger Technology:

Mains pressure hot water is heated through a plate heat exchanger that pulls heat from the stored hot water. The Solar-PHE itself is unpressurised, overcoming all safety and servicing demands that arise from a pressurised store.

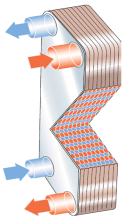

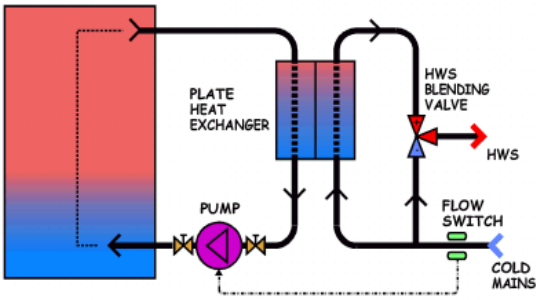

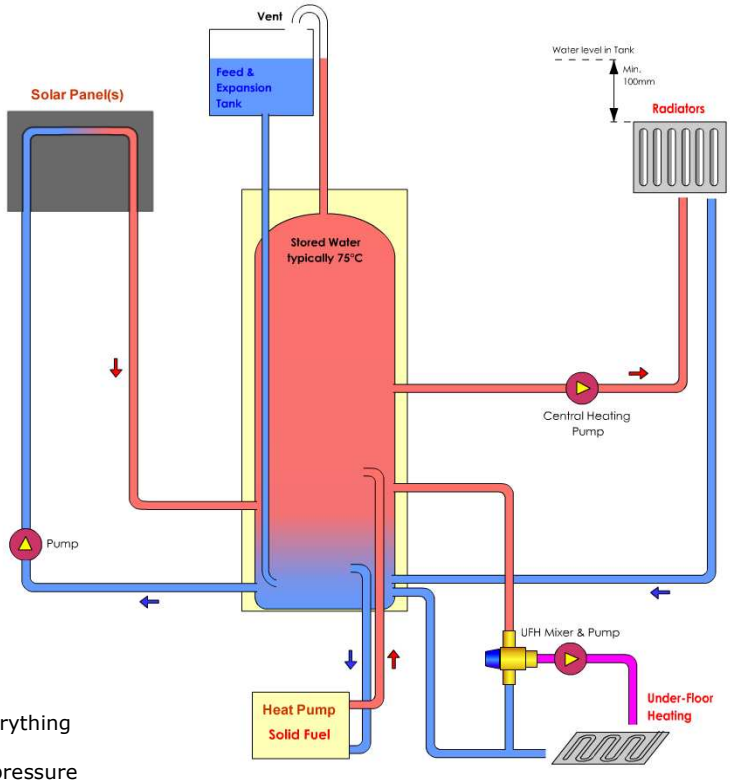

System Integration:

Although it sounds complicated, combining multiple heat sources with multiple heat loads, the use of a thermal store simplifies everything considerably. The single feed and expansion tank is used to feed all the circuits, removing the need for any separate filling loops, pressure relief, or expansion vessels. Everything automatically fills, and there is only one discharge (from the feed tank), making the system more user friendly and removing the possibility of panels running dry. This approach is also more efficient, without the need for a solar coil or heat exchanger, allowing a large number of panels to be connected without causing problems. Overheat protection can be provided by either stopping the solar pump, or dumping heat to radiators or the underfloor heating. Frost protection can be provided by either the solar controller (starting the pump) or by allowing gravity circulation back to the panel during freezing conditions.

Solar Options:

The alternative options for solar include the use of a PV pump for direct connections to an PV electric solar panel, that allows solar to operate power-free. Units can also be supplied with a coil and pressurised solar circuit for glycol systems.

STANDARD OPTIONS	
DHW Heat Exchanger	160 kW
Solar Assembly	Direct Fed
Thermostatic DHW Mixer	22mm
Solid Fuel Connections 28mm	
Twin Heating Circuits	22mm
Immersion Heater	(4x3kW) 12 kW
ADDITIONAL OPTIONS	
Immersion Heaters	12kW to 24kW
Immersion Heater Controller	15kW, 30kW
Thermostatic DHW Mixer	28mm
Temperature Gauge	
Solar Coil, and Sealed System Controls	
PV Solar Pump	
Secondary Return Pump	15-14, 15-50
Heating Pump Grundfos	15-60, 25-55, 25-80
Modulating Heating Pump	
Underfloor Heating Valve	22, 28mm
Programmer	One, Two Channel
Programmable Room Thermostat	TP5000, TP7000
RF Radio Communication with Room Thermostat(s)	1, 2, 3 Zone
Overheat Thermostatic Switch (wired to heating)	

Wood Burner Connection:

Connection to wood burners, or similar, is made directly to the store in larger diameter 28mm fittings. The store is typically positioned higher than the wood burner so that the heat rises into the store under thermo-syphon (gravity) action, without the need for further controls.

STANDARD SIZES (COPPER)		
CAPACITY	DIAMETER	HEIGHT
210 ltr	530mm	1600mm
250 ltr	530mm	1850mm
250 ltr	530mm	1600mm
250 ltr	530mm	1350mm
300 ltr	580mm	1850mm
300 ltr	680mm	1500mm
330 ltr	580mm	2000mm
350 ltr	680mm	1700mm
400 ltr	680mm	1850mm
450 ltr	680mm	2000mm

Dedicated Pressure Systems Ltd.
17 Manor Green Road, Epsom, Surrey KT19 8RA
Tel. 01372 803 643 / 675 Fax. 01372 803678

www.heatweb.com
email: sales@heatweb.com

Amazon Tempest Unvented Cylinders

High Pressure Hot Water Systems using pressurised unvented storage for high performance mains hot water. Stainless steel, with a lifetime guarantee, the Amazon range sticks to standard unvented principals, using an expansion vessel (supplied) instead of internal bubbles. Units come with the full unvented control packs required for installation.

- Mains Fed Hot Water up to 3 bar.
- Duplex 2304 Stainless Construction.
- Indirect and Electric models.
- 15 bar Test Pressure.
- Up to 55 litres/minute of flow.
- Cased with Highly Efficient Insulation
- Choice of Diameters and Heights.
- All Unvented Controls Supplied.
- Solar options.
- Options for fitted control assemblies.

High Quality Construction:
All of our Amazon unvented cylinders are now manufactured using 2304 Duplex Stainless Steel. Tempest units are finished using a wipe-clean, white-coated steel case. Continuing our philosophy of using only the finest materials, the heat loss from the cylinder is minimal, making it extremely economical to run. We are so confident of the construction that we have given all of our stainless cylinders a life-time guarantee to give each customer total peace of mind.

Reheat Times:
Heat-up and re-heat times assume a cold water temperature of 15°C If using a twin coil variant, where the second coil is linked to a solar energy recovery application, the recovery times listed will improve significantly. Depending on the energy input, the recovery times could be halved.

INDIRECT REHEAT TIMES (minutes)							
Capacity	90	125	150	170	200	250	300
Reheat after 70% Drawn	18	25	26	25	24	25	29
Reheat from Cold to 65°C	26	36	37	36	33	35	40

DIRECT REHEAT TIMES (minutes)							
Capacity	90	125	150	170	200	250	300
Reheat after 70% Drawn	27	37	45	51	63	75	136
Reheat from Cold to 65°C	52	72	86	98	108	144	202

STANDARD SPECIFICATIONS	
Cylinder Body Material	Duplex 2304 Stainless Steel
Outer Casing	Plastic Coated Mild Steel, Wipe Clean
Insulation	Polyurethene CHC+HCFC Free
Immersion Heaters	Low Noise Incaloy
Cold Inlet / Hot Outlet	22mm
Primary Coil Flow and Return	22mm
Temperature and Pressure Relief	1/2"
Inlet Group	22mm
Tundish Outlet	22mm
Test Pressure	15 bar
Working Pressure	3 bar
Temperature Pressure Relief	7 bar, 95°C
Maximum Flow	55 ltr/min
Expansion Provision	External Vessel

Material :
Until recently, Duplex 2304 was reserved only for use in chemical plants and refineries due to its corrosion resistant technology. The corrosion resistant properties of Duplex are greater than those offered by other grades of stainless steel used in today's water tanks. These properties are carried forward to our stainless cylinders to ensure total peace of mind for the end customer. Tempest cylinders also undertake the extra process of "pickling" every stainless cylinder before casing. This removes any impurities, which can appear during the welding process. As a result, the cylinder becomes resistant to all forms of corrosion, including pitting and crevice corrosion. Another feature of stainless steel cylinders is that no anode is required, unlike mild steel variants. The benefit is the removal of worry and expense of having the anode replaced on a regular basis. Mild steel cylinders which do not have the anode replaced, are susceptible to early corrosion failure! Duplex steel is totally recyclable. As much as 90% of the post-service life steel is converted into prime stainless products. Whichever way you look at it, Duplex 2304 is superior.

Twin Coil Solar Option:
Environmental issues are currently at the forefront of peoples thoughts. Developers are now looking at solar energy as a compliment to gas or oil powered boilers. Solar not only benefits the environment by reducing the amount of natural resources we consume, but also makes the heating of a building far more efficient and helps to lower utility bills. Our twin coil stainless cylinder is available in all sizes throughout the Tempest range and includes all necessary safety controls.

Rapid Indirect Recovery Options:
Instead of using a coil to allow connection to a boiler, the Pandora can be supplied with a plate heat exchanger (PHE) to reheat the store using everything the boiler can provide. This reduces heat up times dramatically, and reduces the size of store required.

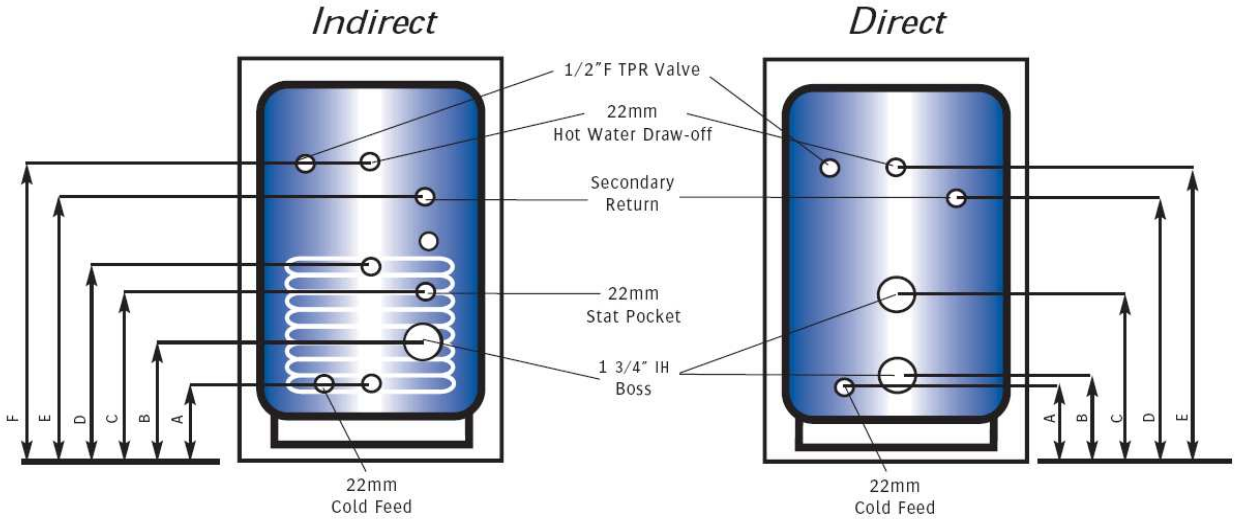

STANDARD SIZES (INDIRECT)								
Capacity	Height	ø	A	B	C	D	E	F
90	750	510	170	200	400	495	-	550
125	950	510	170	200	400	495	-	750
150	1075	510	170	200	400	495	-	880
170	1225	510	170	200	450	600	-	1030
200	1175	554	195	225	475	625	815	930
250	1375	554	195	225	555	845	975	1140
300	1650	554	195	225	555	845	1255	1435
400	1590	660	240	270	640	870	1240	1340
500	1835	660	240	270	640	890	1390	1590

STANDARD SIZES (DIRECT)							
Capacity	Height	ø	A	B	C	D	E
90	750	510	170	200	400	-	550
125	950	510	170	200	400	-	750
150	1075	510	170	200	400	-	880
170	1225	510	170	200	400	-	1030
200	1175	554	195	225	400	815	930
250	1375	554	195	225	400	975	1140
300	1650	554	195	225	500	1255	1435
400	1590	660	240	270	500	1240	1340
500	1835	660	240	270	500	1390	1590

Dedicated Pressure Systems Ltd.
17 Manor Green Road, Epsom, Surrey KT19 8RA
Tel. 01372 803 643 / 675 Fax. 01372 803678

www.heatweb.com
email: sales@heatweb.com

A.O.Smith Commercial Unvented Cylinders

High Pressure Hot Water Systems using pressurised unvented storage for very high performance mains or pump fed hot water. The A.O.Smith range of commercial storage vessels ranges from 300 to 3000 litres, and it suitable for virtually any application from unvented mains storage to buffering large boiler / heating systems.

- Mains Fed Hot Water up to 10 bar.
- Coated Steel Construction.
- PermaGlas® Ultra Coat™ second-generation glass coating.
- Direct, Indirect and Twin Coil models.
- Electric Elements from 3 to 36kW.
- 10 bar Working Pressure.
- Up to 3" Inlet / Outlet Connections.
- Highly Efficient Removable Insulation Casing
- Single-wall spiral heat exchanger
- Insulated access cover for comprehensive maintenance
- Replaceable magnesium anode (option for powered)
- 3 Year Warrantee.

Range of Application:
The A.O.Smith storage comes in three types, Direct, Indirect and Twin Coil, with options for External Heat Exchangers allowing for a combination of up to four heat sources (including electrical). They can be used with domestic mains water, or with boiler primary water up to very high pressures, and with sizes up to 3000 litres make this range the first choice for most commercial applications.

PHE Recovery:
To generate higher quantities of hot water, units can be supplied with plate heat exchanger recovery sets up to 320kW, equivalent to another 6000 litres per hour of hot water. Resulting store sizes are much smaller than otherwise possible. This option also provides the ability to heat up specific quantities, which can be very useful when an economy mode is required, or there are is a variable source such as solar also employed.

Intelligent Controls:
Further options include the fitting of Coster C-BUS linked controls enabling remote control over storage temperatures and timing, and even automatic communication of alarms via modem. Any number of systems can be linked using the 2-wire system, and unlike most systems the computer software and backup is provided completely free of charge for any number of sites.

TECHNICAL SPECIFICATIONS											
Capacity	**l**	**300**	**400**	**500**	**600**	**750**	**1000**	**1500**	**2000**	**2500**	**3000**
Output coil	kW	46	78	100	104	112	145	136	136	145	145
Surface area coil	m2	1.47	2.45	3.11	3.45	3.72	4.82	5.2	5.2	5.5	5.5
Water capacity coil	l	8.9	14.8	18.8	29.3	31.6	40.9	43.8	43.8	46.4	46.4
Flow rate coil (80-60°C)	l/h	1978	3345	4300	4472	4816	6235	5848	5848	6235	6235
Pressure drop coil	mbar	58	244	489	104	128	259	688	688	583	583
Max pressure tank	bar	10	10	10	10	10	10	7	7	7	7
Max pressure coil	bar	16	16	16	16	16	16	7	7	7	7
Maximum temp tank	°C	95	95	95	95	95	95	95	95	95	95
Maximum temp coil	°C	110	110	110	110	110	110	99	99	99	99
Standby loss	kWh/24h	1.32	1.6	1.88	1.85	2.03	2.19	9.2	10.9	12.3	14
Anodes	-	1	1	1	1	1	1	3	3	3	3
Maximum weight	kg	413	524	653	884	979	1343	1938	2568	3202	3797
Draw-off capacity											
Storage capacity	l	296	385	473	643	725	1007	1500	2000	2500	3000
30 min. dT=44°C	l	728	1106	1396	1616	1776	2374	2834	3999	4004	4550
60 min. dT=44°C	l	1177	1868	2373	2633	2871	3791	4165	5330	5424	5969
90 min. dT=44°C	l	1627	2631	3350	3649	3965	5208	5496	6661	6843	7388
120 min. dT=44°C	l	2076	3393	4327	4665	5060	6625	6827	7992	8262	8807
Continuous dT=44°C	l/h	899	1525	1955	2033	2189	2834	2661	2661	2837	2837
Heating-up time dT=55°C	min.	20	15	15	19	20	21	34	45	53	63
Weight empty	kg	117	139	180	241	254	336	438	568	702	797
Weight incl. packaging	kg	128	150	191	252	265	348	458	588	735	840
Width packaging	mm	780	780	780	870	870	1010	1200	1200	1500	1500
Height packaging	mm	1510	1850	2150	1930	2150	2100	2100	2300	2160	2300
Depth packaging	mm	780	780	780	870	870	1010	1655	1655	1980	1980

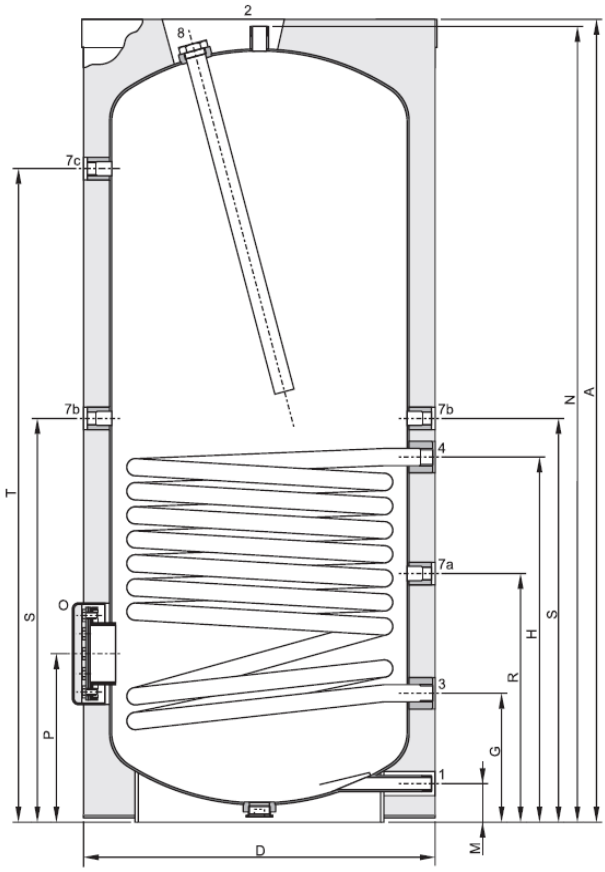

STANDARD SIZES (INDIRECT 300 to 1000 litre)							
Capacity		**300**	**400**	**500**	**600**	**750**	**1000**
A		1370	1705	2040	1835	2030	2000
A		1370	1705	2040	1835	2030	2000
D		720	720	720	910	910	1060
G		325	255	255	305	305	345
H		765	1010	1205	1145	1205	1305
M		75	70	70	85	85	95
N		1310	1650	1990	1795	1990	1960
O		115	115	115	180	180	180
P		325	330	330	415	415	445
R		595	500	500	650	650	700
S		375	1095	1290	1235	1295	1395
T		-	1360	1700	1475	1670	1600
U		1115	-	-	-	-	-
1	Cold water	1"	2"	2"	3"	3"	3"
2	Cold water	1"	2"	2"	3"	3"	3"
3	Inlet coil	1"	1"	1"	1.1/4"	1.1/4"	1.1/4"
4	Outlet coil	1"	1"	1"	1.1/4"	1.1/4"	1.1/4"
7	Connection	3/4"	3/4"	3/4"	3/4"	3/4"	3/4"
8	Anode	-	1.1/4"	1.1/4"	1.1/4"	1.1/4"	1.1/4"
10	Anode	1"	-	-	-	-	-

Sizes for 1500 to 3000 litres on request.

Dedicated Pressure Systems Ltd.
17 Manor Green Road, Epsom, Surrey KT19 8RA
Tel. 01372 803 643 / 675 Fax. 01372 803678

www.heatweb.com
email: sales@heatweb.com

Unvented Cylinders with Plate Heat Exchanger Recovery

Plate Heat Exchange:
The heat exchanger consists of thirty or more stainless steel plates, with a huge surface area for heat transfer.

It is possible to considerably increase the output of an unvented hot water cylinder by using a plate heat exchanger in place of a coil for recovery by a boiler. It becomes possible to run a shower continuously without using up stored hot water, resulting in smaller cylinder sizes.

- Cuts reheat times to less than half otherwise possible.
- Use the full boiler output to reheat water.
- Hot water within one minute from cold start.
- Vary volume of store heated by boiler.
- Combination mode with constant output.
- Smaller cylinder sizes.
- Models from 60 to 320kW.

The reheat time of a typical unvented cylinder is 25 minutes, and once the cylinder has been emptied of hot water you have to wait another 20 minutes to get further hot water. The main problem is the way the stores are heated, using a coil through which the boiler water is pumped. Coils usually only transfer a third of the boilers maximum output, and oversizing a boiler will not speed up reheat times. Coils also put the energy into the bottom half of the stored water, and this is no good when we want hot water instantly.

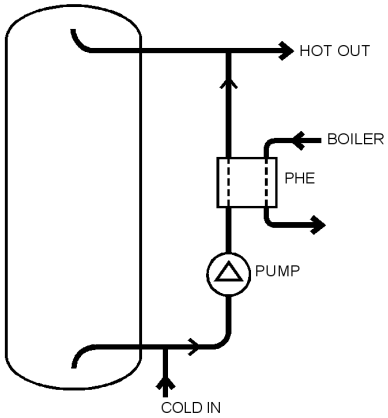

Using a plate heat exchanger allows the full boiler output to be used, cutting reheat times down to only 9 minutes to recover from a bath. The water heated through the plate heat exchanger is fed into the top of the store, where it can be used immediately. This allows showers to be run when the cylinder is cold, and also to choose how much of the store should be heated - it is very easy to select between heating up a sink of hot water, a shower, a bath, or the entire cylinder, just by selecting the time the boiler heats the cylinder.

Commercial Range:
For sizes up to 3000 litres, with control option including remote monitoring and control.
See separate Data Sheet.

LITRE PER HOUR				
Type of store	Capacity	Heat Exchange Capacity	Litres in First Hour 15-65°C	Litres per Hour 15-65°C
Standard Indirect Unvented	125 ltr	12kW	335	210
	200 ltr	20kW	560	360
	300 ltr	**26kW**	**750**	**450**
PHE Unvented	**125 ltr**	**40kW**	**805**	**680**
	200 ltr	40kW	880	680
	300 ltr	40kW	980	680
	500 ltr	140kW	2900	2400
	500 ltr	320kW	5985	5485

It can be seen than a 125 litre unvented using plate recovery from a 40kW boiler will outperform a 300 litre standard unvented connected to the same boiler.

Dedicated Pressure Systems Ltd.
17 Manor Green Road, Epsom, Surrey KT19 8RA
Tel. 0845 2411441 Fax. 01372 803678

www.heatweb.com
email: sales@heatweb.com

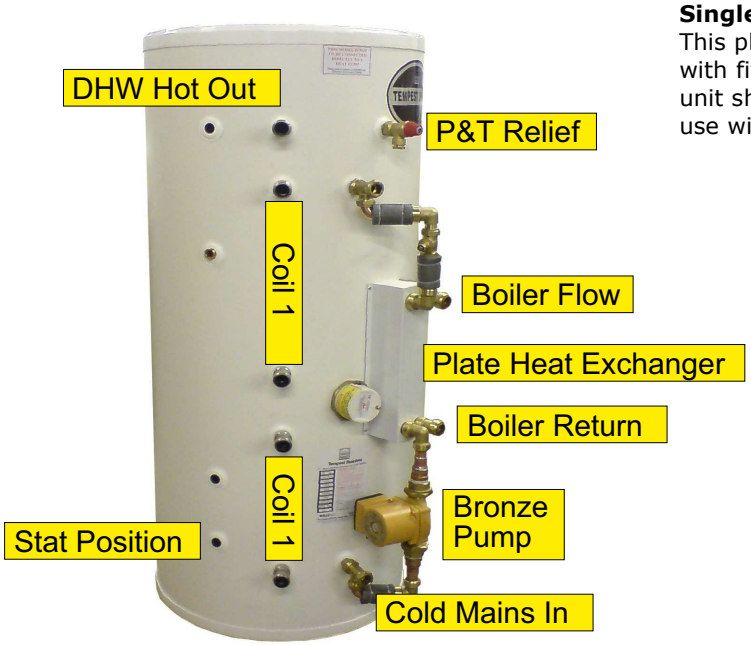

Single Cylinder Setup:
This photograph shows a typical basic single store setup, with fitted plate heat exchanger and circulating pump. The unit shown is not fitted with temperature control and is for use with low temperature heat sources such as Heat Pumps .

Twin Cylinder Setup:
This photograph shows a typical twin store setup, with fitted plate heat exchanger, circulating pump, temperature control valve, and flow regulators for balancing flow to each store. 28mm cold feed connections ensure that some very high output flow rates can be achieved, and the system is suitable for feeding up to 6 bathroom simultaneously.

Home Booster Pump
UPA 15-90

The UPA Home Booster is the quietest potable water booster pump we know of. It is silent running, and capable of turning a poor low flow shower into a power shower, or increasing flow to taps.

- Increases pressure and flow to outlets.
- Silent running.
- Suitable for DIY installation.
- Possible for use on direct mains with permission.
- No Annual Maintenance Requirements.

The UPA is capable of adding 0.6 bar (6m head) of pressure under flow, with flow up to 24 l/min. It has a built in flow switch that detects the start of flow and turns the pump on. The pump will then shut off once the outlet shuts and flow stops. It can be used for boosting the flow from a tank fed hot water cylinder, or with permission from local water authority can be used to boost the mains flow through a combination boiler. The pump is approved for use on potable water supplies.

Simple Installation:
The UPA can easily be cut into existing supply pipework, and comes with two pipework adapters and a 1.5m power cable.

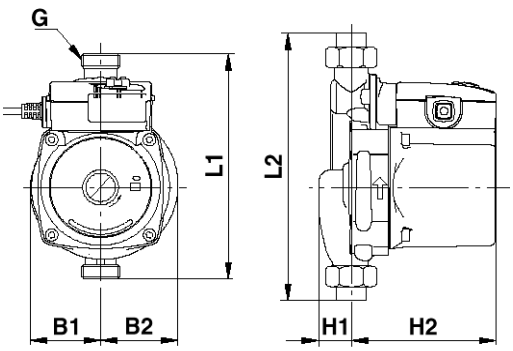

L1 [mm]	160
L2 [mm]	214
H1 [mm]	23
H2 [mm]	103
B1 [mm]	50
B2 [mm]	54
G	¾

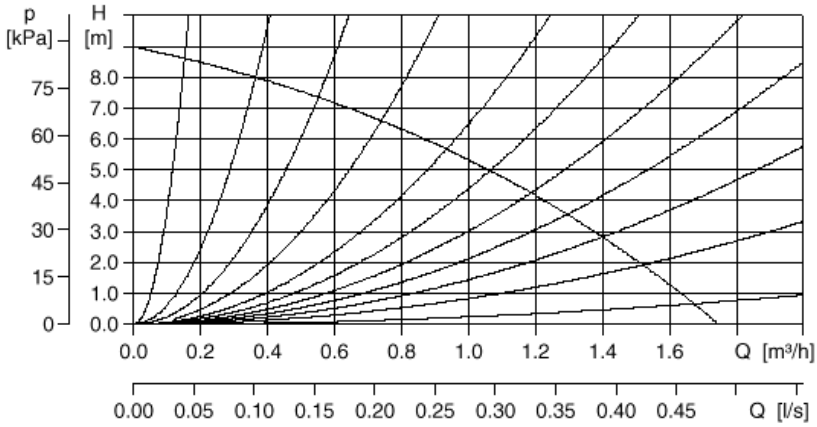

SPECIFICATIONS	
Pump Casing	Cast Iron, Coated
Motor Protection	Impedance Protected
Connection Size	3/4"
Port to Port Length	160mm
Voltage	230V @ 50Hz
Current	0.48 A
Weight	2.7 Kg
Enclosure Class	IP42
Length of Lead	1.5m
Minimum liquid temperature	2°C
Maximum liquid temperature	70°C
Maximum operating pressure	6 bar
Minimum inlet pressure	0.2 bar
Method of Control	Internal Flow Switch

Dedicated Pressure Systems Ltd.
17 Manor Green Road, Epsom, Surrey KT19 8RA
Tel. 01372 803 643 / 675 Fax. 01372 803678

www.heatweb.com
email: sales@heatweb.com

MXSU Stainless Steel Low Noise Pumps

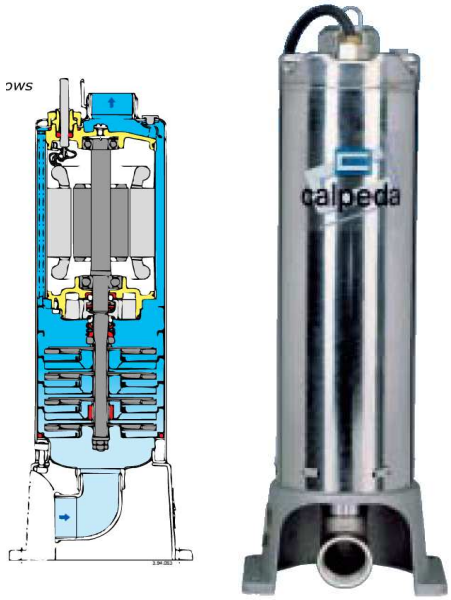

The Calpeda MXSU Pump provides high pressure and flow, with significantly lower noise levels than comparable pumps. The pump chrome-nickel stainless steel, with motor shields in brass, and the motor is encased within the water flow, which assists cooling and absorbs sound. The pump has a small footprint, and comes with a pre-wired wall switch for easier installation.

- Pressures up to 6 bar.
- Flow rates up to 180 lpm from a single pump.
- Low Noise.
- Small Footprint or 190mm x 150mm.
- Submergible.

The pumps are typically used in conjunction with a pressure switch, non-return valve, and expansion vessel, to control the pump and buffer its operation. All these are available as accessories, or the pump can be supplied in a fully pre-fabricated pump-set (see separate data sheet).

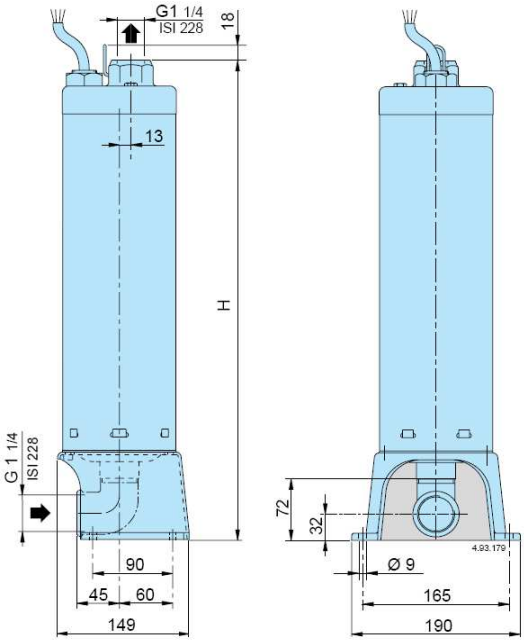

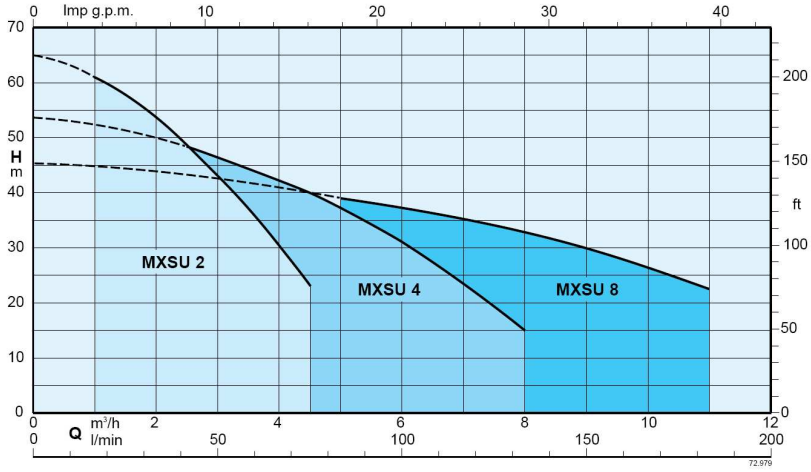

Pump	H mm	kg
MXSUM 203	524	12,3
MXSUM 204	524	12,5
MXSUM 205	548	13,6
MXSUM 206	572	14,8
MXSUM 404	524	14
MXSUM 405	548	14,4
MXSUM 803	548	14,1

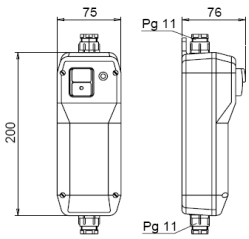

SPECIFICATIONS	
Pump Casing and Shaft	Chrome-nickel Steel
Motor Shield	Brass
Connection Size	1.1/4"
Voltage	230VAC Single Phase 400VAC Three Phase
Current	3.5 to 7 A (on model)
Weight	11 to 14.8 Kg
Enclosure Class	IP68
Length of Lead	2m
Minimum liquid temperature	2°C
Maximum liquid temperature	35°C
Maximum operating pressure	10 bar
Minimum inlet pressure	0.2 bar
Method of Control	External Switching

Dedicated Pressure Systems Ltd.
17 Manor Green Road, Epsom, Surrey KT19 8RA
Tel. 0845 2411441 Fax. 01372 803678

www.heatweb.com
email: sales@heatweb.com

Pump Sets for Cold Water Boosting

The Calpeda range of Pumps and Pump Sets provides a truly comprehensive range of options for cold water pressure and flow boosting. From low cost single pump sets up to multiple pump set assemblies for heavy commercial loading, we can supply the right equipment for the job, tailored to meet the customers precise needs.

- Pressures to suit.
- Flow rates to suit.
- Single, Twin and Multiple pump set options.
- Fully assembled and wired.
- Fixed speed and variable speed pump options.
- BMS options.

As with all DPS products, the range is backed up by our free design and consultancy service. Simply let us know what you are trying to achieve and we will provide designs and pricing for suitable equipment, and talk you through any options that may apply.

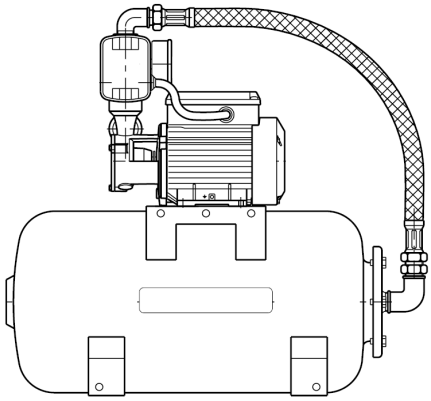

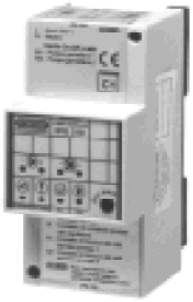

The choice of pump controls ranges from basic fixed speed on/off control using pressure switches, through to full changeover control of multiple pumps using either duty/assist or duty/standby control. To add to this we can tie the sets into our range of commercial plant controls that will allow off-site monitoring of equipment using a modem link with all software provided free of charge. We can even get sets to phone up a service engineer when a problem occurs, without the need for additional on or off-site equipment.

Dedicated Pressure Systems Ltd.
17 Manor Green Road, Epsom, Surrey KT19 8RA
Tel. 01372 803 643 / 675 Fax. 01372 803678

www.heatweb.com
email: sales@heatweb.com

Pump Accessories

A selection of fittings and controls that are typically required with a pump booster set.

See Also:
MXSU Pumps
MXH Pumps
Accumulators
Cold Storage Tanks

CHECK VALVES
VNR 1
VNR 1 1/4
VNR 1 1/2
VNR 2
FOOT VALVES
VDF 1
VDF 1 1/4
VDF 1 1/2
VDF 2

PRESSURE GAUGES
Axial Connection Types:
MA 0-6
MA 0-6 ABS
Radial Connection Type:
MR 0-10
MR 0-12
MR 0-16

CONNECTOR	
RA5 H 92	1"
RA5 H 105	1"

PRESSURE SWITCHES		
Type	Standard Setting	Max Pressure
FSG 2	1.4 bar 2.8 bar	4.5 bar
FSG 22	5.4 bar 7 bar	7 bar
FSG 32	8 bar 10.5 bar	10.5 bar

SPHERICAL VESSEL		
Type	Conn'	Capacity
SS 24	1"	24 ltr

BUTYL Rubber Diaphragm

CYLINDRICAL VESSEL		
Type	Conn'	Capacity
SC 20 BP	1"	20 ltr

BUTYL Rubber Diaphragm

INOX VESSEL		
Type	Conn'	Capacity
SCX 24	1"	20 ltr

BUTYL Rubber Diaphragm

INOX VESSEL		
Type	Conn'	Capacity
SCX 20 BP	1"	20 ltr

BUTYL Rubber Diaphragm

Dedicated Pressure Systems Ltd.
17 Manor Green Road, Epsom, Surrey KT19 8RA
Tel. 01372 803 643 / 675 Fax. 01372 803678

www.heatweb.com
email: sales@heatweb.com

Accumulator Pressure Vessels

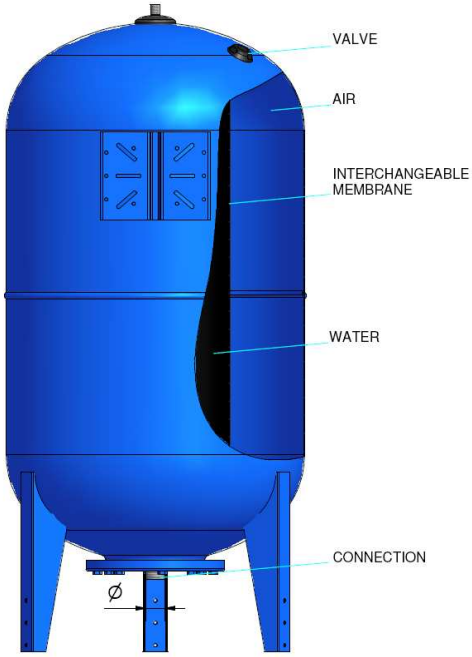

Accumulators are used to store water under pressure and to take up expansion or contraction within hot water systems. They are charged with water from either the mains or from a pump system, and are capable of delivering extremely high flow rates until empty.

- Overcomes loss of pressure when second outlet opens.
- Overcomes poor flow resulting from small mains supply.
- Suitable for DIY installation.
- Connects anywhere into cold mains pipework.
- No Annual Maintenance Requirements.
- Membrane can be replaced on site.
- Ideal for unvented systems.
- Smoothes operation of pumped systems
- Suitable for hard water.

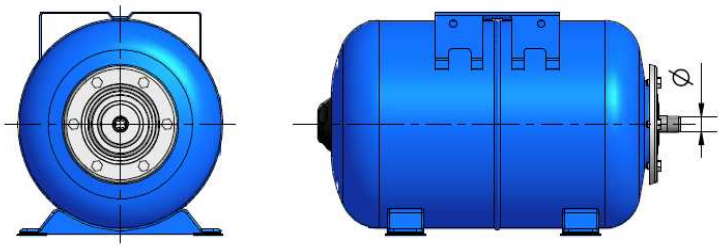

Where a property is supplied via a small bore or long mains supply pipe the loss of pressure within these pipes reduces the amount of water that can be supplied to taps, even if the mains pressure is high to start with. The vessel will charge up to the local static mains pressure, compressing the air pre-charge until it reaches the same pressure. When taps are opened the vessel can make up the extra flow required that the mains can't supply. This is particularly useful where showers are affected by second outlets.

Vessels should be sized to meet the maximum short term demand to taps. The actual volume of water stored is lower than the vessel size as the air is never totally squashed. The air pre-charge pressure should be set to 0.8 times the supply pressure with one outlet running.

When used with pump systems, the large the accumulator used with a pump, the less often the pump will need to be on to match demand, and allows large pumps to be used with variable demand and flow rates lower than the pump should run at.

For accurate sizing please contact DPS technical department.

STANDARD SIZES		
CAPACITY	DIAMETER	HEIGHT / LENGTH
40 ltr Vertical	320mm	610mm
60 ltr Vertical	380mm	850mm
60 ltr	380mm	850mm
80 ltr Vertical	450mm	870mm
80 ltr	450mm	870mm
100 ltr Vertical	450mm	965mm
100 ltr	450mm	965mm
200 ltr Vertical	550mm	1235mm
300 ltr Vertical	630mm	1400mm
500 ltr Vertical	780mm	1550mm
700 ltr Vertical	780mm	1950mm
1000 ltr Vertical	930mm	1950mm

TECHNICAL SPECIFICATIONS	
Maximum Pressure	8 bar (40 to 80 ltr)
	10 bar (100 to 1000 ltr)
Body Material	Epoxy coated carbon steel
Flange Material	Stainless steel
Bladder Material	Butyle rubber

Dedicated Pressure Systems Ltd.
17 Manor Green Road, Epsom, Surrey KT19 8RA
Tel. 01372 803 643 / 675 Fax. 01372 803678

www.heatweb.com
email: sales@heatweb.com

Polyethylene Cold Water Tanks

Polyethylene cold tanks are supplied with:

- Snap-on Lid.
- Bylaw 30 Kit and fitting instructions.
- 1/2" BS1212 Part 2 Ball Valve and 4.5" Float
- Ball Valve Back Plate
- 22mm Compression Tank Connector
- 15mm x 1/2" Angled Service Valve
- Insulation and Ties

STANDARD RECTANGULAR TANKS				
Capacity	**Inch Size**	**Length**	**Width**	**Height**
55 Litre / 12 Gallon	20-12-20	510mm	300mm	525mm
55 Litre / 12 Gallon	24-16-15	610mm	410mm	460mm
55 Litre / 12 Gallon	20-15-18	510mm	390mm	460mm
68 Litre / 15 Gallon	18-18-18	470mm	470mm	475mm
68 Litre / 15 Gallon	24-12-20	615mm	305mm	550mm
68 Litre / 15 Gallon	24-15-18	610mm	385mm	460mm
68 Litre / 15 Gallon	24-17-17	610mm	435mm	440mm
82 Litre / 18 Gallon	24-12-24	615mm	310mm	615mm
82 Litre / 18 Gallon	24-18-19	615mm	460mm	480mm
91 Litre / 20 Gallon	20-20-20	515mm	515mm	530mm
91 Litre / 20 Gallon	24-15-24	615mm	380mm	590mm
114 Litre / 25 Gallon	27-20-20	690mm	515mm	520mm
114 Litre / 25 Gallon	55-20-12	1390mm	500mm	310mm
136 Litre / 30 Gallon	24-24-24	610mm	590mm	590mm
136 Litre / 30 Gallon	39-20-17	1000mm	500mm	440mm
159 Litre / 35 Gallon	29-22-22	750mm	570mm	570mm
159 Litre / 35 Gallon	30-24-23	750mm	570mm	570mm
190 Litre / 42 Gallon	39-20-21	1020mm	500mm	550mm
190 Litre / 42 Gallon	46-19-19	1185mm	503mm	503mm
227 Litre / 50 Gallon	46-24-19	1190mm	610mm	500mm
227 Litre / 50 Gallon	36-24-23	925mm	600mm	570mm
227 Litre / 50 Gallon	64-18-19	1650mm	460mm	475mm
318 Litre / 70 Gallon	64-24-19	1615mm	610mm	500mm
454 Litre / 100 Gallon	64-26-23	1670mm	690mm	580mm

FRAMED TANKS				
Capacity	**Inch Size**	**Width**	**Depth**	**Height**
182 Litre / 40 Gallon	23-23-28	590mm	590mm	711mm
227 Litre / 50 Gallon	23-23-35	590mm	590mm	893mm
204 Litre / 45 Gallon with 18 ltr F&E Tank	23-23-34	590mm	590mm	870mm

STANDARD FEED AND EXPANSION TANKS				
Capacity	**Inch Size**	**Width**	**Depth**	**Height**
18 Litre / 4 Gallon	20-12-20	480mm	320mm	250mm

PRE-INSULATED FEED AND EXPANSION TANK				
18 Litre / 4 Gallon	24-16-15	540mm	320mm	350mm

Dedicated Pressure Systems Ltd.
17 Manor Green Road, Epsom, Surrey KT19 8RA
Tel. 01372 803 643 / 675 Fax. 01372 803678

www.heatweb.com
email: sales@heatweb.com

An Encyclopedia of Hot Water and Central Heating

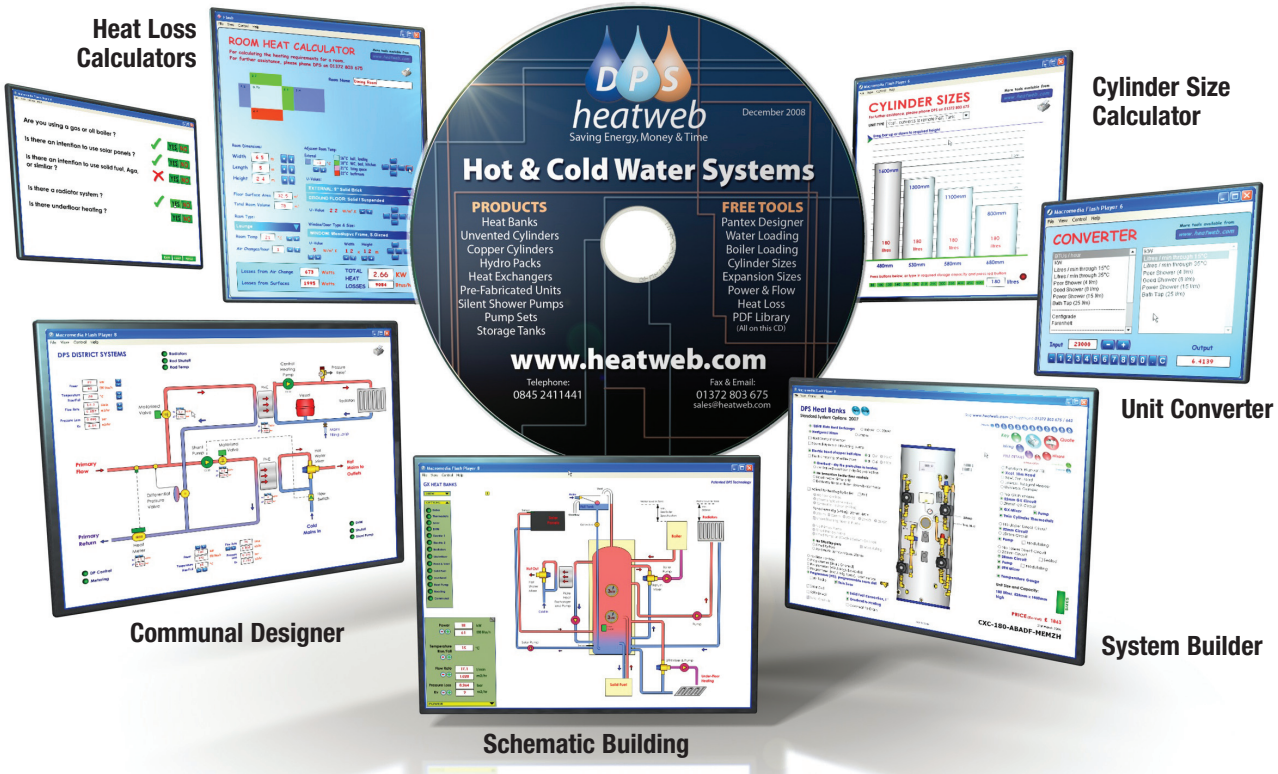

For many years DPS has been supplying systems for local authorities, house builders, plumbers and the public. Our exhaustive product range, our ability to easily provide on-site consultancy and specials, and our track record with regard to reliability and service backup have ensured increasing use of our systems. To continue in our tradition of providing comprehensive technical design support, we are launching our third CD-ROM, packed with everything a designer or specifier could hope for. Not only does the CD contain full product range information, it is also packed with software design tools for everything from heat loss calculations to generating schematics and wiring diagrams, all fully functional and completely free.

Also, technical articles on subjects ranging from solar hot water and heating, to limescale, to underfloor heating, with case studies and links to useful web sites for further reading. Complimented by a huge library of over three hundred PDF documents from both ourselves and other well known suppliers of hot water equipment and controls. With this CD you have all technical data and tools to take on the most challenging designs with confidence.

All on our Free CD

- 10+ separate design software tools
- Technical editorials and animated help
- System Wiring Diagram Generator
- The entire Heatweb website
- 'Build Your Own System' software
- PDF document library

If you would like a free copy of the DPS CD, or would like to find out more information on the DPS range of products please contact us on:

Tel: **0845 2411441**
Fax: **01372 803 678**
Email: **sales@heatweb.com**

Dedicated Pressure Systems Ltd
www.heatweb.com

DPS heatweb
integrated water solutions